Range Rover L322 2002-2005 Workshop Manual

V8 Coolant Flow – Models With FBH

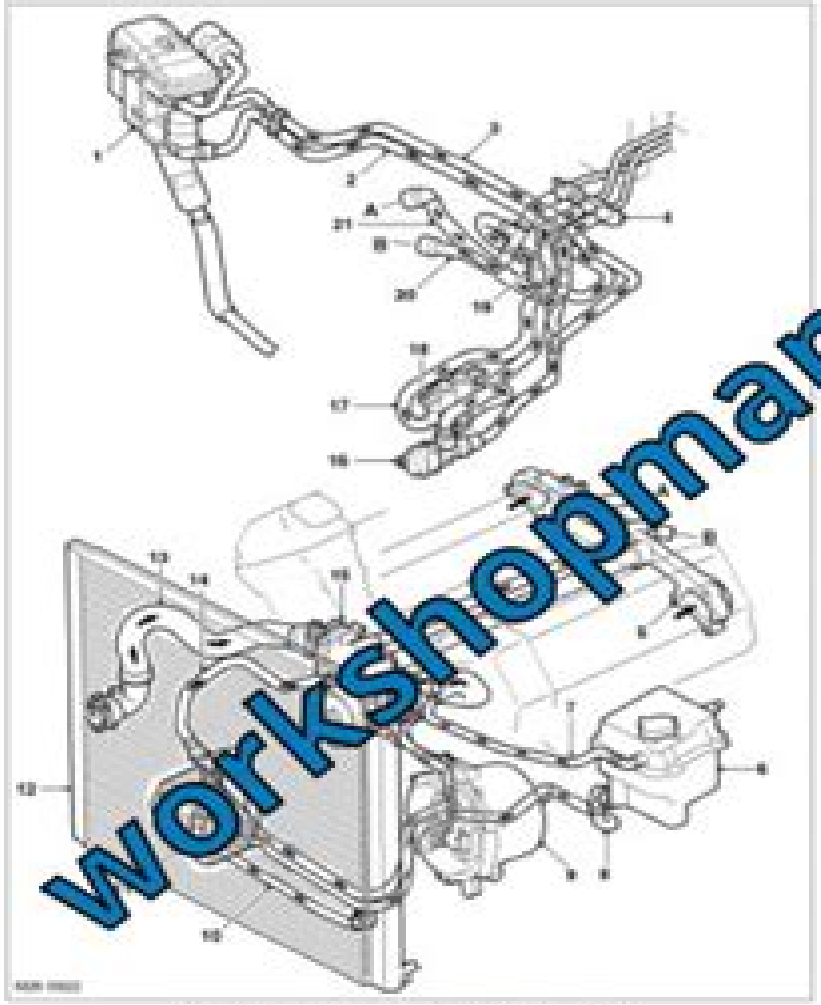

A and B = Heater matrix to engine coolant connections

14. Remove nut and [illegible] earth lead from LH cylinder [illegible]
15. Remove [illegible] earth lead from RH [illegible]

16. Disconnect multiplugs from ignition coils.

17. Disconnect multiplugs from throttle body, thermostat heater, CMP sensor and ECT sensor.
18. Cut 2 cable ties securing engine harness at throttle body and release harness.

19. Disconnect multiplug from RH VCC solenoid.
20. Release VCC multiplug harness from clip.

21. Disconnect multiplug from LH VCC solenoid.

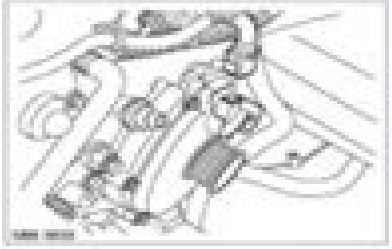

22. Disconnect multiplug from alternator.
23. Release alternator harness from 4 clips.

workshopmanuals.org
PDF DOWNLOAD

Range Rover Service Manual L322

Rosina Ehmann

Range Rover Service Manual L322:

Ignite the flame of optimism with Crafted by is motivational masterpiece, Fuel Your Spirit with **Range Rover Service Manual L322** . In a downloadable PDF format (Download in PDF: *), this ebook is a beacon of encouragement. Download now and let the words propel you towards a brighter, more motivated tomorrow.

https://dev.flighttrampolinepark.com/About/book-search/Download_PDFS/rca_digital_tv_converter_box_dta800b1_manual.pdf

Table of Contents Range Rover Service Manual L322

1. Understanding the eBook Range Rover Service Manual L322
    - The Rise of Digital Reading Range Rover Service Manual L322
    - Advantages of eBooks Over Traditional Books
2. Identifying Range Rover Service Manual L322
    - Exploring Different Genres
    - Considering Fiction vs. Non-Fiction
    - Determining Your Reading Goals
3. Choosing the Right eBook Platform
    - Popular eBook Platforms
    - Features to Look for in an Range Rover Service Manual L322
    - User-Friendly Interface
4. Exploring eBook Recommendations from Range Rover Service Manual L322
    - Personalized Recommendations
    - Range Rover Service Manual L322 User Reviews and Ratings
    - Range Rover Service Manual L322 and Bestseller Lists
5. Accessing Range Rover Service Manual L322 Free and Paid eBooks
    - Range Rover Service Manual L322 Public Domain eBooks
    - Range Rover Service Manual L322 eBook Subscription Services
    - Range Rover Service Manual L322 Budget-Friendly Options
6. Navigating Range Rover Service Manual L322 eBook Formats

    - ePub, PDF, MOBI, and More
    - Range Rover Service Manual L322 Compatibility with Devices
    - Range Rover Service Manual L322 Enhanced eBook Features
7. Enhancing Your Reading Experience
    - Adjustable Fonts and Text Sizes of Range Rover Service Manual L322
    - Highlighting and Note-Taking Range Rover Service Manual L322
    - Interactive Elements Range Rover Service Manual L322
8. Staying Engaged with Range Rover Service Manual L322
    - Joining Online Reading Communities
    - Participating in Virtual Book Clubs
    - Following Authors and Publishers Range Rover Service Manual L322
9. Balancing eBooks and Physical Books Range Rover Service Manual L322
    - Benefits of a Digital Library
    - Creating a Diverse Reading Collection Range Rover Service Manual L322
10. Overcoming Reading Challenges
    - Dealing with Digital Eye Strain
    - Minimizing Distractions
    - Managing Screen Time
11. Cultivating a Reading Routine Range Rover Service Manual L322
    - Setting Reading Goals Range Rover Service Manual L322
    - Carving Out Dedicated Reading Time
12. Sourcing Reliable Information of Range Rover Service Manual L322
    - Fact-Checking eBook Content of Range Rover Service Manual L322
    - Distinguishing Credible Sources
13. Promoting Lifelong Learning
    - Utilizing eBooks for Skill Development
    - Exploring Educational eBooks
14. Embracing eBook Trends
    - Integration of Multimedia Elements
    - Interactive and Gamified eBooks

Range Rover Service Manual L322 Introduction

In the digital age, access to information has become easier than ever before. The ability to download Range Rover Service Manual L322 has revolutionized the way we consume written content. Whether you are a student looking for course material, an avid reader searching for your next favorite book, or a professional seeking research papers, the option to download Range Rover Service Manual L322 has opened up a world of possibilities. Downloading Range Rover Service Manual L322 provides numerous advantages over physical copies of books and documents. Firstly, it is incredibly convenient. Gone are the days of carrying around heavy textbooks or bulky folders filled with papers. With the click of a button, you can gain immediate access to valuable resources on any device. This convenience allows for efficient studying, researching, and reading on the go. Moreover, the cost-effective nature of downloading Range Rover Service Manual L322 has democratized knowledge. Traditional books and academic journals can be expensive, making it difficult for individuals with limited financial resources to access information. By offering free PDF downloads, publishers and authors are enabling a wider audience to benefit from their work. This inclusivity promotes equal opportunities for learning and personal growth. There are numerous websites and platforms where individuals can download Range Rover Service Manual L322. These websites range from academic databases offering research papers and journals to online libraries with an expansive collection of books from various genres. Many authors and publishers also upload their work to specific websites, granting readers access to their content without any charge. These platforms not only provide access to existing literature but also serve as an excellent platform for undiscovered authors to share their work with the world. However, it is essential to be cautious while downloading Range Rover Service Manual L322. Some websites may offer pirated or illegally obtained copies of copyrighted material. Engaging in such activities not only violates copyright laws but also undermines the efforts of authors, publishers, and researchers. To ensure ethical downloading, it is advisable to utilize reputable websites that prioritize the legal distribution of content. When downloading Range Rover Service Manual L322, users should also consider the potential security risks associated with online platforms. Malicious actors may exploit vulnerabilities in unprotected websites to distribute malware or steal personal information. To protect themselves, individuals should ensure their devices have reliable antivirus software installed and validate the legitimacy of the websites they are downloading from. In conclusion, the ability to download Range Rover Service Manual L322 has transformed the way we access information. With the convenience, cost-effectiveness, and accessibility it offers, free PDF downloads have become a popular choice for students, researchers, and book lovers worldwide. However, it is crucial to engage in ethical downloading practices and prioritize personal security when utilizing online platforms. By doing so, individuals can make the most of the vast array of free PDF resources available and embark on a journey of continuous learning and intellectual growth.

FAQs About Range Rover Service Manual L322 Books

What is a Range Rover Service Manual L322 PDF? A PDF (Portable Document Format) is a file format developed by Adobe that preserves the layout and formatting of a document, regardless of the software, hardware, or operating system used to view or print it. **How do I create a Range Rover Service Manual L322 PDF?** There are several ways to create a PDF: Use software like Adobe Acrobat, Microsoft Word, or Google Docs, which often have built-in PDF creation tools. Print to PDF: Many applications and operating systems have a "Print to PDF" option that allows you to save a document as a PDF file instead of printing it on paper. Online converters: There are various online tools that can convert different file types to PDF. **How do I edit a Range Rover Service Manual L322 PDF?** Editing a PDF can be done with software like Adobe Acrobat, which allows direct editing of text, images, and other elements within the PDF. Some free tools, like PDFescape or Smallpdf, also offer basic editing capabilities. **How do I convert a Range Rover Service Manual L322 PDF to another file format?** There are multiple ways to convert a PDF to another format: Use online converters like Smallpdf, Zamzar, or Adobe Acrobats export feature to convert PDFs to formats like Word, Excel, JPEG, etc. Software like Adobe Acrobat, Microsoft Word, or other PDF editors may have options to export or save PDFs in different formats. **How do I password-protect a Range Rover Service Manual L322 PDF?** Most PDF editing software allows you to add password protection. In Adobe Acrobat, for instance, you can go to "File" -> "Properties" -> "Security" to set a password to restrict access or editing capabilities. Are there any free alternatives to Adobe Acrobat for working with PDFs? Yes, there are many free alternatives for working with PDFs, such as: LibreOffice: Offers PDF editing features. PDFsam: Allows splitting, merging, and editing PDFs. Foxit Reader: Provides basic PDF viewing and editing capabilities. How do I compress a PDF file? You can use online tools like Smallpdf, ILovePDF, or desktop software like Adobe Acrobat to compress PDF files without significant quality loss. Compression reduces the file size, making it easier to share and download. Can I fill out forms in a PDF file? Yes, most PDF viewers/editors like Adobe Acrobat, Preview (on Mac), or various online tools allow you to fill out forms in PDF files by selecting text fields and entering information. Are there any restrictions when working with PDFs? Some PDFs might have restrictions set by their creator, such as password protection, editing restrictions, or print restrictions. Breaking these restrictions might require specific software or tools, which may or may not be legal depending on the circumstances and local laws.

Find Range Rover Service Manual L322 :

rca digital tv converter box dta800b1 manual
ranger tug owners manual

randall 102 user guide
range rover l322 2010 repair service manual
random house cabin fever crosswords vacation
ravel valses nobles et sentimentales alfred masterwork edition
rca ez2050 manual
random garifunas biographies garifunas you may not know volume 1
rauf series guide
range guard fire suppression system manual navy
rat a tat tat birds photographs by jeff winterberg 1991 2003
rawlinson construction cost guide nsw
~~raj kamal embedded systems solution manual~~
rakeym shadow tribe 1 siren publishing the lynn hagen manlove collection
~~rama revealed bantam spectra book~~

Range Rover Service Manual L322 :

vokabelheft russisch vokabeln lernen dank praktischem - Aug 03 2022
web sep 18 2022 amazon com vokabelheft russisch vokabeln lernen dank praktischem Übungsheft 3 spalten german edition dai juseur books
vokabelheft russisch vokabelheft 2 spalten zweispaltig mit - Jan 08 2023
web nov 3 2021 vokabelheft russisch vokabelheft 2 spalten zweispaltig mit softcover platz für 2975 vokabeln 120 seiten ca a5 german edition l c on amazon com free shipping on qualifying offers
heft leo Übersetzung im russisch deutsch wörterbuch - Mar 30 2022
web russisch deutsch leo org startseite zur mobilen version wechseln leo org ihr wörterbuch im internet für russisch deutsch Übersetzungen mit forum vokabeltrainer und sprachkursen natürlich auch als app wörterbuchnavigation
vokabelheft russisch mit 2 spalten amazon com tr - Aug 15 2023
web vokabelheft russisch mit 2 spalten 120 seiten liniert vokabeln lernen zweispaltiges buch russisches motiv ca din a5 vokabelhefte amique amazon com tr kitap
vokabelheft für russisch vokabeln 2 spalten mit persö - Sep 04 2022
web vokabelheft für russisch vokabeln 2 spalten mit persönlicher lernkontrolle 1700 zeilen format ca 20 x 25 5 cm 100 seiten
vokabelheft russisch vokabelbuch dreispaltig din a4 i - Nov 06 2022

web jun 19 2021 vokabelheft russisch vokabelbuch dreispaltig din a4 i vokabeln lernen für russland i 110 seiten mit inhaltsverzeichnis russa sebastian 9798523518454 books amazon ca

mein vokabelheft zum russisch lernen blanko vokabelbuch zum - Feb 09 2023

web mein vokabelheft zum russisch lernen blanko vokabelbuch zum lernen der russischen sprache und ihrer vokabeln florales muster geschenk nicht nur für frauen und mädchen sprachenbuch en lettres amazon com tr kitap

vokabelheft russisch deutsch buch mit zwei auszufüllenden - Dec 27 2021

web vokabelheft russisch deutsch buch mit zwei auszufüllenden spalten nummerierte seiten index praktisches format 15 2x22 8 cm 100 seiten lba editions amazon com tr kitap

 vokabelheft synonym 10 x anderes wort und synonyme für vokabelheft - Jan 28 2022

web die synonyme für vokabelheft sind zwischen 5 und 17 buchstaben lang das kürzeste synonym für vokabelheft lautet lexik und das längste synonym heißt wörterverzeichnis welche bedeutungen und verwandten wörter hat das wort vokabelheft

vokabelheft russisch vokabelbuch dreispaltig din a4 i - Jul 14 2023

web vokabelheft russisch vokabelbuch dreispaltig din a4 i vokabeln lernen für russland i 110 seiten mit inhaltsverzeichnis russa sebastian amazon com tr kitap

vokabelheft vokabeln lernen mit dem vokabelheft vokabeln net - Feb 26 2022

web vokabelheft ob in der schule an der universität oder der volkshochschule jeder der eine fremdsprache erlernen will muss auch zwangsläufig vokabeln lernen denn nur so kann ein entsprechender wortschatz aufgebaut werden um sich später einmal in der neuen sprache ausdrücken zu können

vokabelheft russland russisch vokabelheft a5 120 seiten - Dec 07 2022

web vokabelheft russland russisch vokabelheft a5 120 seiten zwei spalten sprachen einfach üben und lernen i fremdsprachen englisch französisch geschenkidee zum start ins neue schuljahr design calsign amazon com tr kitap

vokabelheft russisch 100 seiten liniert zweispaltig - Oct 05 2022

web vokabelheft in ca din a5 format 14 8 x 0 4 x 21 cm perfekt f r die schule das studium oder vokabelheft russisch 100 seiten liniert zweispaltig ca din a5 by meine vokabelhefte goodreads

slovar russisch vokabelheft hoenack anneliese amazon de - Mar 10 2023

web slovar russisch vokabelheft hoenack anneliese isbn 9783061200169 kostenloser versand für alle bücher mit versand und verkauf duch amazon

vokabelheft russisch vokabeln trainieren mit erfolgstracker - Jun 13 2023

web vokabelheft russisch vokabeln trainieren mit erfolgstracker und inhaltsverzeichnis systematisch zum sicheren grundwortschatz 3 spalten mit inhaltsverzeichnis 120 seiten im format b5 18 x25cm vokabelhefte fremdsprachen amazon

com tr kitap

russisch vokabelheft german edition by ada abels goodreads - Jun 01 2022

web beschreibungdein neues lieblings vokabelheft hat 100 seiten eine größe von 21 59cm 27 94cm russisch vokabelheft german edition by ada abels goodreads home

vokabeltrainer download russisch vokabeln - Apr 30 2022

web oct 9 2005 die vokabeldatei russisch alltag ist eine kostenlose zusatzdatei zum vokabeltrainer von langenscheidt mit diesem vokabeltrainer können sie die hier aufgelisteten vokabeln mit vielen verschiedenen funktionen trainieren z b karteikartensystem prüfungsmodus multiple choice kreuzworträtsel superlearning

häfft shop vokabel häfft russisch online kaufen - Apr 11 2023

web vokabel häfft russisch dostojewski tolstoi nabokov diese russischen schreiberlinge haben ganze romane mit kyrillischen hieroglyphen geschrieben und ihr braucht schon ewig um ein einziges wort zu

vokabelheft für russisch vokabeln 2 spalten mit persönlicher - May 12 2023

web vokabelheft für russisch vokabeln 2 spalten mit persönlicher lernkontrolle 1700 zeilen format ca 20 x 25 5 cm 100 seiten rivers daisy amazon com tr kitap

russian online net schreibheft russisch Прописи - Jul 02 2022

web in diesem schreibheft haben wir lektionen zusammengefasst die es deutschen muttersprachler erleichtern die russischen schreibbuchstaben zu erlernen mit hilfe dieses schreibheftes können sie nicht nur auf russisch schreiben üben sondern auch handschriftliche und kursiv texte lesen lernen

la edad de oro de los virreyes el virreinato en la monarquía - Apr 03 2023

web la edad de oro de los virreyes el virreinato en la monarquía hispánica durante los siglos xvi y xvii dialnet manuel rivero rodríguez editores año de publicación 978 84 460 2863 5 saber más ha sido reseñado en manuel rivero rodrÍguez la edad de oro de los virreyes

9788446028635 la edad de oro de los virreyes el virreinato en la - May 24 2022

web la edad de oro de los virreyes el virreinato en la monarquía hispánica durante los siglos xvi y xvii universitaria de rivero rodríguez manuel en iberlibro com isbn 10 8446028638 isbn 13 9788446028635 ediciones akal s a 2011 tapa blanda

la edad de oro de los virreyes el virreinato en l 2023 - Jul 26 2022

web la edad de oro de los virreyes el virreinato en l w r grace co los años formativos feb 24 2023 pragmática del español jan 14 2022 pragmática del español introduces the central topics in pragmatics and discourse from a sociolinguistic perspective pragmatic variation is addressed within each topic with examples from different

la edad de oro de los virreyes el virreinato en la monarquía - Mar 02 2023

web la edad de oro de los virreyes el virreinato en la monarquía hispánica durante los siglos xvi y xvii universitaria rivero rodríguez manuel amazon es libros libros libros universitarios y de estudios superiores humanidades envío rápido y gratis te ofrecemos una prueba gratis de 30 días de prime versión kindle 10 44

la edad de oro de los virreyes el virreinato en la monarquía - Aug 07 2023

web la edad de oro de los virreyes el virreinato en la monarquía hispánica durante los siglos xvi y xvii semantic scholar corpus id 159569075 la edad de oro de los virreyes el virreinato en la monarquía hispánica durante los siglos xvi y xvii m r rodríguez published 2011 art no paper link available save to library create alert

manuel rivero rodrÍguez la edad de oro de los virreyes el virreinato - May 04 2023

web manuel rivero rodrÍguez la edad de oro de los virreyes el virreinato en la monarquía hispánica durante los siglos xvi y xvii madrid akal 2011 368 pp isbn 978 84 460 2863 5 communities collections all of ruidera statistics home revistas de la uclm vínculos de historia nº 2 2013

la edad de oro de los virreyes el virreinato en l pdf - Apr 22 2022

web cuidados naturales para la edad de oro natural care for the golden age a propósito de la edad de oro la edad de oro la edad de oro cartografías de la conciencia española en la edad de oro la edad de oro de los virreyes el virreinato en l downloaded from files climagic org by guest salazar sierra en busca de la edad de oro alhulia s l

la edad de oro de los virreyes el virreinato en la - Feb 01 2023

web sinopsis de la edad de oro de los virreyes el virreinato en la monarquia his panica durante los siglos xvi y xvii virrey es el que hace las veces del rey

propÓsito de los virreyes espaÑoles entre - Sep 27 2022

web pp 43 73 m rivero la edad de oro de los virreyes el virreinato en la monarquía hispánica durante los siglos xvi y xvii madrid akal 2011 p cardim j l palos eds el mundo de los virreyes en las monarquías de españa y de portugal madrid frankfurt iberoamericana ver

la edad de oro de los virreyes el virreinato en la monarquía - Jun 05 2023

web la edad de oro de los virreyes el virreinato en la monarquía hispánica durante los siglos xvi y xvii reseña de la obra mencionada contenido de la revista en la actualización que la propia fecyt ha hecho del ranking de revistas de humanidades y ciencias sociales con sello de calidad

la edad de oro de los virreyes el virreinato en la monarquía - Nov 29 2022

web may 9 2011 virrey es el que hace las veces del rey en los siglos xvi y xvii los reyes de la casa de austria poseyeron un conjunto de estados cuya característica común era que el rey debía gobernarlos como si sólo fuera soberano de cada uno de ellos por tal motivo en sus títulos disposiciones y manifestaciones públicas los austrias no se

pdf la edad de oro de los virreyes el virreinato en la - Sep 08 2023
web en este articulo se analiza la problematica a partir de uno de los hitos claves de transicion la reconstruccion del modelo de relacion entre rey y reinos que se inicio en 1648 como respuesta a la grave crisis interna que asolo la monarquia a partir de 1640
la edad de oro de los virreyes el virreinato en la monarquia his - Oct 29 2022
web sinopsis de la edad de oro de los virreyes el virreinato en la monarquia his panica durante los siglos xvi y xvii virrey es el que hace las veces del rey en los siglos xvi y xvii los reyes de la casa de austria poseyeron un conjunto de estados cuya característica común era que el rey debía gobernarlos como
la edad de oro de los virreyes el virreinato en la monarquía - Feb 18 2022
web el virreinato en la monarquía hispánica durante los siglos xvi y xvii la edad de oro de los virreyes manuel rivero rodríguez ediciones akal des milliers de livres avec la livraison chez vous en 1 jour ou en magasin avec 5 de réduction
la edad de oro de los virreyes kobo com - Jun 24 2022
web la edad de oro de los virreyes el virreinato en la monarquía hispánica durante los siglos xvi y xvii de manuel rivero rodríguez series universitaria sinopsis expandir comprimir sinopsis virrey es el que hace las veces del rey
manuel rivero rodrÍguez la edad de oro de los virreyes el virreinato - Jul 06 2023
web manuel rivero rodrÍguez la edad de oro de los virreyes el virreinato en la monarquía hispánica durante los siglos xvi y xvii madrid akal 2011 368 pp isbn 978 84 460 2863 5 en las últimas décadas hemos asistido a la proliferación de los estudios sobre los virreyes de la monarquía hispánica
ingebook la edad de oro de los virreyes el virreinato en la - Aug 27 2022
web la edad de oro de los virreyes el virreinato en la monarquía hispánica durante los siglos xvi y xvii manuel rivero rodríguez editorial akal edición 1 fecha publicación 2011 isbn 9788446028635 isbn ebook 9788446037057 páginas 365 grado universitario Área humanidades sección historia idioma español
la edad de oro de los virreyes apple books - Dec 31 2022
web apr 19 2011 mediante un desarrollo cronológico se sigue la evolución de un sistema creado bajo el reinado de carlos i y adaptado al gobierno de américa al trasformar las colonias en reinos de indias
la edad de oro de los virreyes el virreinato en la monarquia his - Mar 22 2022
web la edad de oro de los virreyes el virreinato en la monarquia his panica durante los siglos xvi y xvii 2011 es un libro escrito por manuel rivero rodriguez que se enfoca en el periodo de los virreyes en la monarquía hispánica durante los siglos xvi y xvii
la edad de oro de los virreyes el virreinato en la monarquía - Oct 09 2023

web apr 19 2011 la edad de oro de los virreyes el virreinato en la monarquía hispánica durante los siglos xvi y xvii manuel rivero rodríguez ediciones akal apr 19 2011 history 368 pages

june 2014 mrcaseyhistory - Jun 10 2023

web global history and geography new york regents june 2014 exam formats view examination paper with answers solve examination paper questions questions 1 20 questions 21 35 questions 36 50 questions 51 64 view examination paper with answers questions answers free preview not all questions are shown total

june 2014 global history answeres wrbb neu - Apr 27 2022

web history 0470 42 paper 4 alternative to coursework may june 2014 1 hour no additional materials are required read these instructions first an answer booklet is provided inside this question paper you should follow the instructions on the front cover

world history archive june 04 2014 chegg com - Dec 24 2021

global history and geography examination june - Jan 05 2023

web history 0470 12 paper 1 may june 2014 2 hours no additional materials are required read these instructions first an answer booklet is provided inside this question paper you should follow the instructions on the front cover of the answer booklet if you

cambridge international examinations cambridge international - May 29 2022

web sep 22 2023 june 2014 global history answeres author subsites imoney my 2023 09 22 06 00 16 subject june 2014 global history answeres keywords june 2014 global history answeres created date 9 22 2023 6 00 16 am

global history and geography nysedregents org - Oct 14 2023

web global history and geography new york regents june 2014 exam directions 1 50 for each statement or question record on your separate answer sheet the number of the word or expression that of those given best completes the statement or answers the

cambridge international examinations cambridge international - Nov 03 2022

web may june 2014 igcse geography paper sc query to enjoy a better and faster experience and to use features like jumping from question paper to mark scheme or editing collections may june 2014 s14 past papers for igcse geography

may june 2014 igcse geography paper sc query - Sep 01 2022

web world history archive containing a full list of world history questions and answers from june 2014

may june 2014 igcse history paper sc query - Mar 07 2023

web global history june 2014 regents answers document read may 14th 2018 global history june 2014 regents answers in this

site is not the same as a solution calendar you buy in a wedding album collection or download off the web june 2014 regents global

on this day in history june 14 timeanddate com - Nov 22 2021

global history and geography new york regents june 2014 exam - Aug 12 2023

web sep 6 2022 notice to teachers june 2014 regents examination in global history and geography chinese edition only dbq scaffold question 9 only 9 kb january 2014 regents examination in global history and geography 257 kb scoring key part i

june 2014 global history answeres rhur impacthub net - Jul 31 2022

web history 0470 11 paper 1 may june 2014 2 hours no additional materials are required read these instructions first an answer booklet is provided inside this question paper you should follow the instructions on the front cover of the answer booklet if you need additional answer paper ask the invigilator for a continuation booklet answer three

june 2014 global history answeres subsites imoney my - Mar 27 2022

web may 25 2023 mr cellini 1 07k subscribers subscribe 1 1k views 2 months ago global regents review crq practice in this video mr cellini reviews how to answer the second crq from the june 2019 global

cambridge international examinations cambridge international - Feb 23 2022

web jun 4 2014 world history archive containing a full list of world history questions and answers from june 04 2014

archive regents examination in global history and geography - Jul 11 2023

web unit 9 global regents review ap world history ii unit 1 age of revolutions unit 2 nationalism and imperialism unit 3 the great war and the interwar period unit 4 world war ii and the cold war era unit 5 recent past to near future unit 6 world history

global history and geography new york regents high - Dec 04 2022

web hiring managers will expect you to be able to answer them smoothly and without hesitation this ebook contains 273 questions and answers for job interview and as a bonus web addresses to 309 video movies for a better understanding of the technological process

world history archive june 2014 chegg com - Jun 29 2022

web you could purchase guide june 2014 global history answeres or acquire it as soon as feasible you could quickly download this june 2014 global history answeres after getting deal so subsequent to you

june 2014 global regents orientation sutd edu sg - Feb 06 2023

web regents june 2014 exam global history and geography view with answers or solve this paper interactively view examination paper with answers regents january 2014 exam global history and geography view with answers or solve this

paper interactively view

global history regents review answering crq questions - Jan 25 2022

web army birthday usa day of mourning estonia flag day usa liberation day falkland islands remembrance day of the oppressed armenia today in history which major historical events happened on june 14 who was born on this date who died in which

global history regents june 2014 answer key imgur - Apr 08 2023

web may june 2014 igcse history paper sc query to enjoy a better and faster experience and to use features like jumping from question paper to mark scheme or editing collections may june 2014 s14 past papers for igcse history

global history and geography new york regents june 2014 - May 09 2023

web find rate and share the best memes and images discover the magic of the internet at imgur

global history and geography new york regents june 2014 exam - Sep 13 2023

web answer 14 14 martin luther john calvin and henry viii all played a key role in the 1 attempts made to reclaim the holy land 2 fall of the ottoman empire 3 end of religious unity in europe 4 establishment of parliamentary democracy in britain answer

june 2014 global history answeres pdf full pdf - Oct 02 2022

web sep 28 2023 june 2014 global history answeres author rhur impacthub net 2023 09 28 04 10 11 subject june 2014 global history answeres keywords june 2014 global history answeres created date 9 28 2023 4 10 11 am