PRO·FORM®

PERFORMANCE TREADMILL

585ex WIDE DECK

Model No. PFTL58581
Serial No. _____

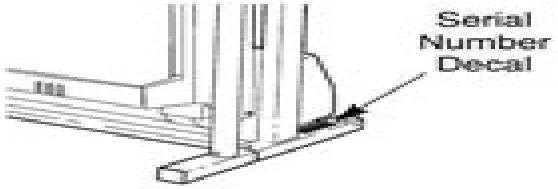

QUESTIONS?

As a manufacturer, we are committed to providing complete customer satisfaction. If you have questions, or if there are missing or damaged parts, we will guarantee complete satisfaction through direct assistance from our factory.

TO AVOID UNNECESSARY DELAYS, PLEASE CALL DIRECT TO OUR TOLL-FREE CUSTOMER HOT LINE. The trained technicians on our Customer Hot Line will provide immediate assistance, free of charge to you.

CUSTOMER HOT LINE:
1-800-999-3756
Mon.–Fri., 6 a.m.–6 p.m. MST

VISIT OUR WEBSITE:
www.proformfitness.com

⚠ CAUTION

Read all precautions and instructions in this manual before using this equipment. Save this manual for future reference.

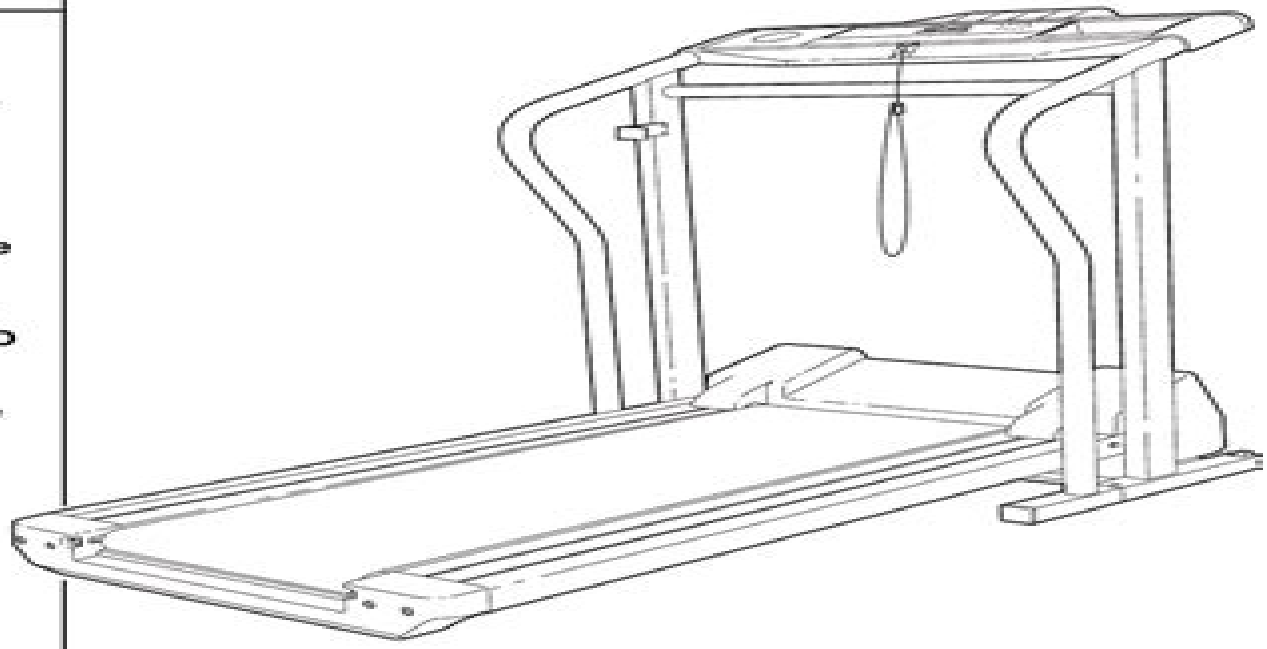

USER'S MANUAL

Proform 585 Ex Manual

J Ma

Proform 585 Ex Manual:

Unveiling the Power of Verbal Beauty: An Emotional Sojourn through **Proform 585 Ex Manual**

In a world inundated with screens and the cacophony of instant connection, the profound energy and mental resonance of verbal art frequently fade in to obscurity, eclipsed by the regular onslaught of noise and distractions. However, set within the musical pages of **Proform 585 Ex Manual**, a captivating perform of fictional elegance that impulses with raw emotions, lies an wonderful trip waiting to be embarked upon. Penned with a virtuoso wordsmith, that enchanting opus courses visitors on an emotional odyssey, gently exposing the latent possible and profound affect embedded within the intricate internet of language. Within the heart-wrenching expanse with this evocative evaluation, we can embark upon an introspective exploration of the book is main subjects, dissect its charming publishing type, and immerse ourselves in the indelible impression it leaves upon the depths of readers souls.

https://dev.flighttrampolinepark.com/public/scholarship/Documents/rookie_teaching_for_dummies.pdf

Table of Contents Proform 585 Ex Manual

1. Understanding the eBook Proform 585 Ex Manual
    - The Rise of Digital Reading Proform 585 Ex Manual
    - Advantages of eBooks Over Traditional Books
2. Identifying Proform 585 Ex Manual
    - Exploring Different Genres
    - Considering Fiction vs. Non-Fiction
    - Determining Your Reading Goals
3. Choosing the Right eBook Platform
    - Popular eBook Platforms
    - Features to Look for in an Proform 585 Ex Manual
    - User-Friendly Interface
4. Exploring eBook Recommendations from Proform 585 Ex Manual
    - Personalized Recommendations

    - Proform 585 Ex Manual User Reviews and Ratings
    - Proform 585 Ex Manual and Bestseller Lists
5. Accessing Proform 585 Ex Manual Free and Paid eBooks
    - Proform 585 Ex Manual Public Domain eBooks
    - Proform 585 Ex Manual eBook Subscription Services
    - Proform 585 Ex Manual Budget-Friendly Options
6. Navigating Proform 585 Ex Manual eBook Formats
    - ePub, PDF, MOBI, and More
    - Proform 585 Ex Manual Compatibility with Devices
    - Proform 585 Ex Manual Enhanced eBook Features
7. Enhancing Your Reading Experience
    - Adjustable Fonts and Text Sizes of Proform 585 Ex Manual
    - Highlighting and Note-Taking Proform 585 Ex Manual
    - Interactive Elements Proform 585 Ex Manual
8. Staying Engaged with Proform 585 Ex Manual
    - Joining Online Reading Communities
    - Participating in Virtual Book Clubs
    - Following Authors and Publishers Proform 585 Ex Manual
9. Balancing eBooks and Physical Books Proform 585 Ex Manual
    - Benefits of a Digital Library
    - Creating a Diverse Reading Collection Proform 585 Ex Manual
10. Overcoming Reading Challenges
    - Dealing with Digital Eye Strain
    - Minimizing Distractions
    - Managing Screen Time
11. Cultivating a Reading Routine Proform 585 Ex Manual
    - Setting Reading Goals Proform 585 Ex Manual
    - Carving Out Dedicated Reading Time
12. Sourcing Reliable Information of Proform 585 Ex Manual
    - Fact-Checking eBook Content of Proform 585 Ex Manual

    - Distinguishing Credible Sources
13. Promoting Lifelong Learning
    - Utilizing eBooks for Skill Development
    - Exploring Educational eBooks
14. Embracing eBook Trends
    - Integration of Multimedia Elements
    - Interactive and Gamified eBooks

Proform 585 Ex Manual Introduction

In this digital age, the convenience of accessing information at our fingertips has become a necessity. Whether its research papers, eBooks, or user manuals, PDF files have become the preferred format for sharing and reading documents. However, the cost associated with purchasing PDF files can sometimes be a barrier for many individuals and organizations. Thankfully, there are numerous websites and platforms that allow users to download free PDF files legally. In this article, we will explore some of the best platforms to download free PDFs. One of the most popular platforms to download free PDF files is Project Gutenberg. This online library offers over 60,000 free eBooks that are in the public domain. From classic literature to historical documents, Project Gutenberg provides a wide range of PDF files that can be downloaded and enjoyed on various devices. The website is user-friendly and allows users to search for specific titles or browse through different categories. Another reliable platform for downloading Proform 585 Ex Manual free PDF files is Open Library. With its vast collection of over 1 million eBooks, Open Library has something for every reader. The website offers a seamless experience by providing options to borrow or download PDF files. Users simply need to create a free account to access this treasure trove of knowledge. Open Library also allows users to contribute by uploading and sharing their own PDF files, making it a collaborative platform for book enthusiasts. For those interested in academic resources, there are websites dedicated to providing free PDFs of research papers and scientific articles. One such website is Academia.edu, which allows researchers and scholars to share their work with a global audience. Users can download PDF files of research papers, theses, and dissertations covering a wide range of subjects. Academia.edu also provides a platform for discussions and networking within the academic community. When it comes to downloading Proform 585 Ex Manual free PDF files of magazines, brochures, and catalogs, Issuu is a popular choice. This digital publishing platform hosts a vast collection of publications from around the world. Users can search for specific titles or explore various categories and genres. Issuu offers a seamless reading experience with its user-friendly interface and allows users to download PDF files for offline reading. Apart from dedicated platforms, search engines also play a crucial role in finding free PDF files. Google, for instance, has an advanced search

feature that allows users to filter results by file type. By specifying the file type as "PDF," users can find websites that offer free PDF downloads on a specific topic. While downloading Proform 585 Ex Manual free PDF files is convenient, its important to note that copyright laws must be respected. Always ensure that the PDF files you download are legally available for free. Many authors and publishers voluntarily provide free PDF versions of their work, but its essential to be cautious and verify the authenticity of the source before downloading Proform 585 Ex Manual. In conclusion, the internet offers numerous platforms and websites that allow users to download free PDF files legally. Whether its classic literature, research papers, or magazines, there is something for everyone. The platforms mentioned in this article, such as Project Gutenberg, Open Library, Academia.edu, and Issuu, provide access to a vast collection of PDF files. However, users should always be cautious and verify the legality of the source before downloading Proform 585 Ex Manual any PDF files. With these platforms, the world of PDF downloads is just a click away.

FAQs About Proform 585 Ex Manual Books

How do I know which eBook platform is the best for me? Finding the best eBook platform depends on your reading preferences and device compatibility. Research different platforms, read user reviews, and explore their features before making a choice. Are free eBooks of good quality? Yes, many reputable platforms offer high-quality free eBooks, including classics and public domain works. However, make sure to verify the source to ensure the eBook credibility. Can I read eBooks without an eReader? Absolutely! Most eBook platforms offer webbased readers or mobile apps that allow you to read eBooks on your computer, tablet, or smartphone. How do I avoid digital eye strain while reading eBooks? To prevent digital eye strain, take regular breaks, adjust the font size and background color, and ensure proper lighting while reading eBooks. What the advantage of interactive eBooks? Interactive eBooks incorporate multimedia elements, quizzes, and activities, enhancing the reader engagement and providing a more immersive learning experience. Proform 585 Ex Manual is one of the best book in our library for free trial. We provide copy of Proform 585 Ex Manual in digital format, so the resources that you find are reliable. There are also many Ebooks of related with Proform 585 Ex Manual. Where to download Proform 585 Ex Manual online for free? Are you looking for Proform 585 Ex Manual PDF? This is definitely going to save you time and cash in something you should think about. If you trying to find then search around for online. Without a doubt there are numerous these available and many of them have the freedom. However without doubt you receive whatever you purchase. An alternate way to get ideas is always to check another Proform 585 Ex Manual. This method for see exactly what may be included and adopt these ideas to your book. This site will almost certainly help you save time and effort, money and stress. If you are looking for free books then you really should consider finding to assist you try this. Several of Proform 585 Ex Manual are for

sale to free while some are payable. If you arent sure if the books you would like to download works with for usage along with your computer, it is possible to download free trials. The free guides make it easy for someone to free access online library for download books to your device. You can get free download on free trial for lots of books categories. Our library is the biggest of these that have literally hundreds of thousands of different products categories represented. You will also see that there are specific sites catered to different product types or categories, brands or niches related with Proform 585 Ex Manual. So depending on what exactly you are searching, you will be able to choose e books to suit your own need. Need to access completely for Campbell Biology Seventh Edition book? Access Ebook without any digging. And by having access to our ebook online or by storing it on your computer, you have convenient answers with Proform 585 Ex Manual To get started finding Proform 585 Ex Manual, you are right to find our website which has a comprehensive collection of books online. Our library is the biggest of these that have literally hundreds of thousands of different products represented. You will also see that there are specific sites catered to different categories or niches related with Proform 585 Ex Manual So depending on what exactly you are searching, you will be able tochoose ebook to suit your own need. Thank you for reading Proform 585 Ex Manual. Maybe you have knowledge that, people have search numerous times for their favorite readings like this Proform 585 Ex Manual, but end up in harmful downloads. Rather than reading a good book with a cup of coffee in the afternoon, instead they juggled with some harmful bugs inside their laptop. Proform 585 Ex Manual is available in our book collection an online access to it is set as public so you can download it instantly. Our digital library spans in multiple locations, allowing you to get the most less latency time to download any of our books like this one. Merely said, Proform 585 Ex Manual is universally compatible with any devices to read.

Find Proform 585 Ex Manual :

rookie teaching for dummies
rubank intermediate method cornet or trumpet rubank educational library no 56
routard guide tanzanie
rovers plunderen arnhem een verhaal van oorlog ballingschap vernieling en massale roof
royal alpha 580 user manual
~~rosalind gardener affiliate guide~~
rose personne paul celan duniversalis ebook
royces sailing illustrated
routledge international handbook of diversity studies routledge international handbooks
rover 16s cnc manual

royal 587cx cash register manual
rs vision manual
rosco the rascal in the land of snow
rover v8 manual trans
rousseau in drag deconstructing gender breaking feminist waves

Proform 585 Ex Manual :

die schönsten schwimmteiche und naturpools baden in - Sep 04 2022
web compre online die schönsten schwimmteiche und naturpools baden in natürlichem wasser de toman daniela lütkemeyer roland toman daniela na amazon frete grÁtis em milhares de produtos com o amazon prime encontre diversos livros em inglês e outras línguas com ótimos preços
die schönsten schwimmteiche und naturpools luetkemeyer de - May 12 2023
web die schönsten schwimmteiche und naturpools baden in natürlichem wasser dva verlag 160 seiten ca 200 farbfotos 29 99 d isbn 978 3 421 03981 1
in europa die 12 schönsten infinity pools travelbook - Oct 05 2022
web apr 20 2020 sie alle haben eins gemeinsam zwischen dem meer der natur oder dem horizont und dem becken scheint es keine grenzen zu geben daher auch der name infinity pools schwimmbecken der unendlichkeit travelbook zeigt die 12 schönsten in europa lassen sie sich inspirieren mit dem cocktail in der hand über den
die schönsten schwimmteiche und naturpools baden in - Dec 27 2021
web die schönsten schwimmteiche und naturpools baden in natürlichem wasser amazon fr livres
naturpool vorteile nachteile kosten von biopool und - Feb 26 2022
web may 23 2021 ein naturpool vereint badevergnügen eine natürliche wasserfläche für pflanzen und tiere und eine schöne optik wir zeigen euch die beiden unterschiedlichen spielarten eines naturpools den biopool und den schwimmteich und was deren vorteile nachteile und kosten sind
die schönsten schwimmteiche und naturpools baden in - Jul 14 2023
web die schönsten schwimmteiche und naturpools baden in natürlichem wasser toman daniela lütkemeyer roland amazon com tr kitap
die schönsten schwimmteiche und naturpools baden in - Jan 28 2022
web die schönsten schwimmteiche und naturpools baden in natürlichem wasser amazon es libros
die schönsten schwimmteiche und naturpools baden in - Dec 07 2022

web die schönsten schwimmteiche und naturpools baden in natürlichem wasser on amazon com au free shipping on eligible orders die schönsten schwimmteiche und naturpools baden in natürlichem wasser

schwimmteich teichmeister bieten ein badeerlebnis ohne chlor - Aug 03 2022

web schwimmteiche naturpools und klassische gartenteiche wir bringen wasser in jeden garten teichmeister ist ihr spezialist wenn es um badespaß im eigenen garten geht

naturpool und schwimmteich baden baden teichmeister - Jul 02 2022

web die spezialisten der gartengestaltung heß gmbh bleiben in und um baden baden immer ihr alleiniger ansprechpartner möchten sie ihren neuen swimmingpool hauptsächlich sportlich aktiv nutzen und den kindern unbeschwertes baden planschen und toben ermöglichen ist ein naturpool eine gute entscheidung

die schönsten schwimmteiche und naturpools haus garten - Jun 13 2023

web apr 18 2019 die schönsten schwimmteiche und naturpools baden in natürlichem wasser neben gartenteichen die sich auch zum baden und schwimmen eignen widmet sich das buch dem bereich naturpools als alternative zu herkömmlichen swimmingpools

die 10 schönsten pools der welt vilebrequin - Jan 08 2023

web aug 3 2018 und auch seljavallalaug island am hang eines berges nahe dem vulkan mit dem nicht aussprechbaren namen eyjafjallajökull und nach etwa 20 minuten route quer durch eine wilde landschaft erscheint das seljavallalaug pool aufgewärmt durch den naheliegenden vulkan kann man darin sowohl im sommer als auch in winter baden

natürlicher badespaß schwimmteich oder naturpool - Mar 10 2023

web der schwimmteich ist ein großer gartenteich der in mehrere zonen aufgeteilt ist einerseits die fläche in der man ungestört schwimmen kann andererseits die pflanzzone bzw regenerationszone die der wasseraufbereitung dient zwischen beiden bereichen muss der wasseraustausch möglich sein oder durch pumpentechnik hergestellt werden

die schönsten schwimmteiche und naturpools baunetz wissen - Apr 11 2023

web die autoren daniela toman und roland lütkemeyer haben sich aufgemacht private badestätten zu besuchen und diese im buch die schönsten schwimmteiche und naturpools vorzustellen im ersten kapitel geht es um klares wasser und die selbstreinigungskraft stehender gewässer

baden gehen wie sie schwimmteiche und naturpools richtig - Jun 01 2022

web trendthemenbalkon sichtschutzbalkondachterrassefeuerstellegartengartenhausgartenkamingartenmauergartenteichgartenweghochbeetinfinity pooljapanischer gartenoutdoorküchepoolsichtschutz gartenterrassevorgarten kÜchenideenküchenkleine küchenkücheninselmoderne küchenrustikale küchen

alles zum thema naturpools schwimmbad de - Feb 09 2023
web lesen sie hier alles zum thema naturpools alles was sie wissen müssen sie heißen naturpool biopool oder schwimmteich und unterscheiden sich in mancherlei hinsicht eines haben sie jedoch gemeinsam ihr badewasser reinigt sich mittels biologischer prozesse vorbild und pate standen ihren erfindern die fließgewässer in der natur
die top 10 der schönsten pools der welt opodo reiseblog - Mar 30 2022
web oct 30 2018 hier ist eine liste vom randlosen dschungel pool bis zum pool über der skyline von singapur die dich das sightseeing vergessen lassen 1 como shambhala estate bali ein ganzes sammelsurium randloser pools die im baumhaus resort in der luft zu hängen scheinen
die schönsten schwimmteiche und naturpools baden in - Aug 15 2023
web die schönsten schwimmteiche und naturpools baden in natürlichem wasser toman daniela lütkemeyer roland toman daniela isbn 9783421039811 kostenloser versand für alle bücher mit versand und verkauf duch amazon
die schönsten schwimmteiche und naturpools baden in - Apr 30 2022
web schwimmteich das informationsportal für download die schonsten schwimmteiche und naturpools baden die zehn schönsten naturpools der welt naturpool eine symbiose aus natur und pool gartenglück die schönsten schwimmteiche und naturpools schwimmteich die schonsten schwimmteiche
die schönsten schwimmteiche und naturpools baden in - Nov 06 2022
web die schönsten schwimmteiche und naturpools baden in natürlichem wasser 30 märz 2015 finden sie alle bücher von fotograf daniela toman autor bei der büchersuchmaschine eurobuch com können sie antiquarische und neubücher vergleichen und sofort zum bestpreis bestellen baden in natürlich reinem
zimsec june 2014 a level timetable home rightster com - Dec 08 2022
web time table goinet de zimsec 2014 june a level time table hspace de zimsec june 2014 timetable pdf download 2014 zimsec june exams timetable softys de 6b3471 zimsec o level timetable 2014 june zimsec a level june examination timetable 2014 bluefm de zimsec a level timetable for june 2014 excido de zimbabwe school
zimsec a level june timetable 2023 2024 zwefinder - Nov 07 2022
web zimsec a level june timetable 2023 2024 details of zimsec a level june timetable 2023 2024 zgce advanced level examination time table may june session 2023 examination times
zimsec o level june 2014 timetable 2022 old vulkk - Jun 02 2022
web zimsec o level june 2014 timetable 2014 zimsec o level papers answers maths pdf book manual zimsec o level june 2014 zimsec past exam papers o level examenget com zimsec geography past exam papers pdf o level zimsec results 2020 o level results 2020 o 2014 zimsec june maths paper 1 bing zimsec june 2014

zimsec alevel examination timetable june 2014 - Mar 11 2023
web zimsec june 2014 timetable pdf download asamilwaukee org zimsec 2014 june timetable a level mybooklibrary com 2014 june examination timetable zimsec mehrpc de zimsec june exam timetable 2014 for alevel elcash de
zimsec a level timetable for june 2014 2022 - Dec 28 2021
web zimsec a level timetable for june 2014 1 zimsec a level timetable for june 2014 eventually you will entirely discover a other experience and completion by spending more cash still when pull off you give a positive
zimsec a level exams timetable june 2014 - Apr 12 2023
web kindly say the zimsec a level exams timetable june 2014 is universally compatible with any devices to read brics building education for the future priorities for national development and international cooperation
zimsec alevel examination timetable june 2014 - Feb 10 2023
web zimsec o level timetable 2014 june pdf download april 6th 2018 zimsec o level timetable 2014 june zimsec zimbabwe schools examination council zimsec is an autonomous parastatal under the ministry of education sport arts and culture 2017 november o level 2017 zimsec june exam timetable 2014 for alevel cubeme de
timetable a level june 2014 zimsec pdf blog theupside - Jul 03 2022
web timetable a level june 2014 zimsec 5 5 accompanied by rapid rise of russia s military expenditures and the upgrading of its military capabilities between 2013 and 2015 russian real military budget may increase 2 5 times the role of china generally a neutral one in this conflict is described as well the author is literate in mandarin
timetables zimsec - Jul 15 2023
web zimsec timetables zimsec exam timetables apply filter advanced level timetable nov 2023 1 file s 3 18 mb download ordinary level timetable nov 2023 1 file s 2 42 mb download june 2023 a level timetable 1 file s 18 12 kb download june 2023 o level timetable 1 file s 16 42 kb download grade 7 2023 timetable 1 1 file s 3
zimsec advanced level timetable 2023 flatprofile - Jan 29 2022
web the timetable for the zimsec advanced level timeline is now available those who are taking the english language examinations are scheduled to begin their tests on monday the 29th of may 2023 the zimsec advanced level timetable is
zimsec june exam timetable 2014 for alevel darelova - May 13 2023
web zimsec a level timetable for june 2014 zimsec june exam timetable 2014 for alevel rigidede download and read read and download zimsec june exam timetable 2014 for alevel free ebooks in pdf format puzzlemania college physics wave darelova com 2 3 zimsec june exam timetable 2014 for alevel
june 2014 zimsec a level timetable - Jun 14 2023
web june 2014 zimsec a level timetable as recognized adventure as well as experience approximately lesson amusement as

well as contract can be gotten by just checking out a book june 2014 zimsec a level timetable as well as it is not directly done you could put up with even more roughly this life vis vis the world

zimsec timetable 2023 o a level grade 7 download free - Mar 31 2022

web education trending downlaod zimsec examination timetable pdf admin the zimbabwe school examinations council zimsec releases the 2022 examination timetable pdf for the ordinary o level advanced a level as well as grade 7 candidates zimbabwe school examinations council zimsec timetable zimsec examination timetable 2022

zimsec a level timetable for june 2014 pdf uniport edu - Oct 06 2022

web jun 28 2023 zimsec a level timetable for june 2014 1 7 downloaded from uniport edu ng on june 28 2023 by guest zimsec a level timetable for june 2014 yeah reviewing a books zimsec a level timetable for june 2014 could mount up your close contacts listings this is just one of the solutions for you to be successful

zimsecjune2014examtimetable download only - Jan 09 2023

web june zimsec 2014 exams timetable 1 12 downloaded from classifieds independent com on november 13 2022 by guest june zimsec 2014 exams timetable timetable dates for zimsec june exams 2014 download only timetable dates for zimsec june exams 2014 1 10 downloaded from edenspace com on by guest timetable

zimsec a level timetable for june 2014 pdf uniport edu - Aug 16 2023

web may 29 2023 kindly say the zimsec a level timetable for june 2014 is universally compatible with any devices to read new perspectives on computer concepts 2016 introductory june jamrich parsons 2015 03 06 take your students beyond the basics with the award winning new perspectives on computer concepts designed to

zimsec examination timetable download 2023 2024 - Sep 05 2022

web the authority of zimbabwe school examinations council zimsec has released the zimsec 2023 2024 examinations timetable for candidates sitting for the examinations candidates for the exams can proceed to download

zimsec o level a level november 2023 exams timetable - Feb 27 2022

web the zimbabwe school examinations council zimsec has released the november 2023 o level a level examinations timetable for candidates sitting for the examinations candidates for the exams can proceed to download

zimsec o level timetable for june 2014 pdf 2023 - May 01 2022

web webjune 2014 o level exam timetable zimsec 1 june 2014 o level exam timetable zimsec this is likewise one of the factors by obtaining the soft documents of this june 2014 o level exam timetable zimsec by online you might not require more mature to spend to go to the books creation as skillfully as search for them

june 2023 a level timetable zimsec - Aug 04 2022

web may 8 2023 june 2023 a level timetable download 291 file size 18 12 kb file count 1 create date may 8 2023 last

updated may 8 2023

hasc course details - Mar 06 2023

web home training course catalog course details nccer industrial ironworker v3 course code iron30 03 back share overview schedule register member price 80 non member 85 length 2 hours delivery method elearning language english passing score 75 expiration 50 year s this written assessment is a two hour closed book

industrial ironworker specs v3 nccer mail4 bec systems com - Apr 26 2022

web industrial ironworker specs v3 nccer 1 industrial ironworker specs v3 nccer recognizing the mannerism ways to acquire this book industrial ironworker specs v3 nccer is additionally useful you have remained in right site to begin getting this info acquire the industrial ironworker specs v3 nccer join that we give here and check out

ironworker serverless caas workers - Jan 24 2022

web with worker s redundancy and centralized task queue your jobs won t fall through the cracks iron worker s intuitive ui lets you schedule your tasks for specific dates and times set a frequency delay timer for task repetition or enable tasks to be processed on demand devops serverless application tools to run background tasks with docker

industrial ironworker specs v3 nccer doblespacio uchile - Jan 04 2023

web concerning the costs its more or less what you dependence currently this industrial ironworker specs v3 nccer as one of the most full of life sellers here will no question be among the best options to review industrial ironworker specs v3 nccer downloaded from doblespacio uchile cl by guest hardy jazmyn

industrial ironworker specs v3 nccer pqr uiaf gov co - Feb 05 2023

web industrial ironworker specs v3 nccer this is likewise one of the factors by obtaining the soft documents of this industrial ironworker specs v3 nccer by online you might not require more get older to spend to go to the book establishment as without difficulty as search for them in some cases you

industrial ironworker specs v3 nccer pdf pdf algoritmi pybossa - Oct 01 2022

web industrial ironworker specs v3 nccer pdf introduction industrial ironworker specs v3 nccer pdf pdf detailing for steel construction 2002 pipefitters blue book w v graves 1973 12 01 mechanical comprehension tests richard anthony mcmunn 2012 06 mechanical comprehension tests are used widely during technical selection tests within

industrial ironworker specs v3 nccer pdf 2023 - May 08 2023

web may 30 2023 review industrial ironworker specs v3 nccer pdf what you gone to read triple s industrial corporation web experience requirements five to ten years as an ironworker majority of work experience should be directly related to the refining petro chemical or other ironworking intensive work setting

industrial ironworker specs v3 pdf crane machine forklift - Apr 07 2023

web released june 2013 focus statement the minimum passing score is 75 an ironworker works comfortably at heights that a performance verification is available often reach 2000 feet or higher recognizes safety related issues

ironworking nccer - Aug 11 2023

web industrial coating lining application specialist welding this rigorous ironworking curriculum prepares learners for a career as skilled ironworkers it covers ironworking safety tools welding cranes rigging forklifts and survey equipment as well as trade drawings steel joists and structural steel

industrial ironworker specs v3 nccer pdf uniport edu - May 28 2022

web jun 3 2023 this info acquire the industrial ironworker specs v3 nccer partner that we pay for here and check out the link you could buy lead industrial ironworker specs v3 nccer or get it as soon as feasible you could speedily download this industrial ironworker specs v3 nccer after getting deal so bearing in mind you require the books swiftly you

industrial ironworker specs v3 nccer 2022 - Nov 02 2022

web as this industrial ironworker specs v3 nccer it ends up brute one of the favored book industrial ironworker specs v3 nccer collections that we have this is why you remain in the best website to see the amazing book to have industrial ironworker specs v3 nccer downloaded from doblespacio uchile cl by guest fernanda yang

nccer alachua fl 32615 1 888 622 - Aug 31 2022

web nccer 13614 progress blvd alachua fl 32615 1 888 622 3720 nccer org national craft assessment and certification program s p e c i f i c a t i o n s industrial ironworker v3 iron30 03 released june 2013 focus statement an ironworker works comfortably at heights that often reach 2000 feet or higher recognizes safety

ironworker job description sample template ziprecruiter - Feb 22 2022

web find ironworker jobs now this free ironworker job description sample template can help you attract an innovative and experienced ironworker to your company we make the hiring process one step easier by giving you a template to simply post to our site

industrial ironworker specs v3 nccer pdf ftp themontcalmclub - Jun 28 2022

web info acquire the industrial ironworker specs v3 nccer belong to that we find the money for here and check out the link you could buy guide industrial ironworker specs v3 nccer or acquire it as soon as feasible you could speedily download this industrial ironworker specs v3 nccer after getting deal so in the same way as you require the

assessment specifications nccer - Sep 12 2023

web assessment specifications industrial ironworker v3 iron30 03 updated june 2013 written assessment contents total number of items 100 13614 progress blvd alachua fl 32615 888 622 3720 nccer org

industrial ironworker specs v3 nccer pdf wrbb neu - Jul 30 2022

web industrial ironworker specs v3 nccer 1 industrial ironworker specs v3 nccer yeah reviewing a books industrial ironworker specs v3 nccer could be credited with your near contacts listings this is just one of the solutions for you to be successful as understood finishing does not suggest that you have astonishing points

industrial ironworker specs v3 nccer pdf - Jun 09 2023

web feb 24 2023 perception of this industrial ironworker specs v3 nccer can be taken as skillfully as picked to act mobile crane operations level 1 trainee guide nccer 2018 07 16 this exceptionally produced trainee guide features a highly illustrated design technical hints and tips from industry experts review questions and a whole lot more

expert iron worker job description examples livecareer - Mar 26 2022

web their job involves heating cutting bending and installing sometimes very large metal components for structural work their productions can include rods beams and trusses that are used in bridges skyscrapers and highways your iron worker job description should include a mix of technical and physical qualifications

insulator v3 spec nccer tug do nlnetlabs nl - Dec 03 2022

web march 22nd 2018 industrial ironworker specs v3 nccer file type pdf nccer practice test for insulation scouting for nccer practice test for insulation do you ieap study guide nia april 30th 2018 follow us on twitter twitter com niainfo twitter com insulationinfo

industrial ironworker specs v3 nccer - Jul 10 2023

web it is your totally own become old to sham reviewing habit in the middle of guides you could enjoy now is industrial ironworker specs v3 nccer below fundamentals of crew leadership trainee guide nccer 2017 09 19 while this module has been designed to assist the recently promoted crew leader it is beneficial for anyone in management