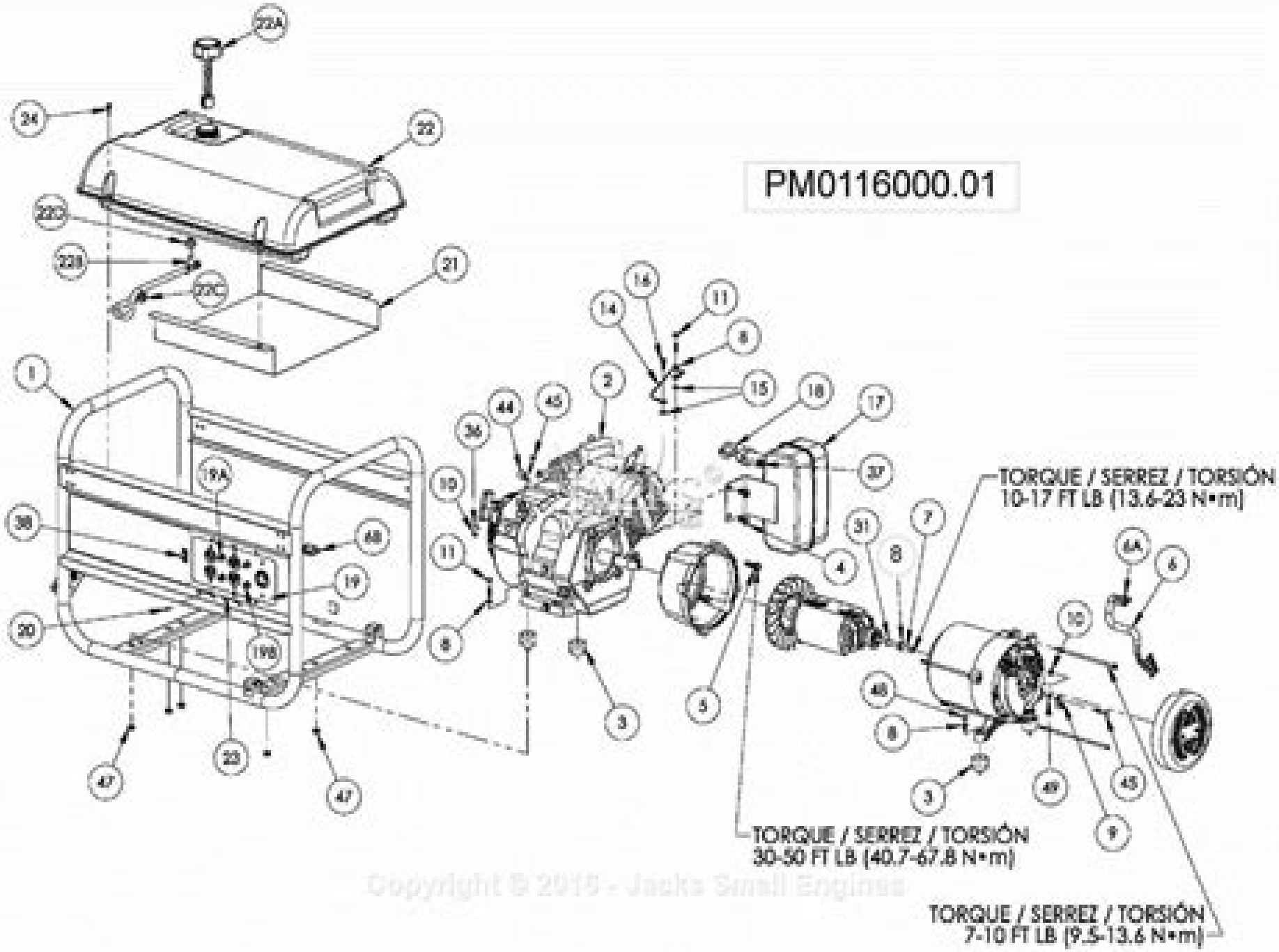

Copyright © 2015 - Jacks Small Engines

Onan Parts And Service Manuals

R Pring

Onan Parts And Service Manuals:

This is likewise one of the factors by obtaining the soft documents of this **Onan Parts And Service Manuals** by online. You might not require more era to spend to go to the book introduction as skillfully as search for them. In some cases, you likewise reach not discover the publication Onan Parts And Service Manuals that you are looking for. It will definitely squander the time.

However below, next you visit this web page, it will be fittingly certainly simple to get as capably as download guide Onan Parts And Service Manuals

It will not bow to many epoch as we run by before. You can realize it though perform something else at home and even in your workplace. for that reason easy! So, are you question? Just exercise just what we manage to pay for under as without difficulty as review **Onan Parts And Service Manuals** what you like to read!

https://dev.flighttrampolinepark.com/About/scholarship/HomePages/How%20To%20Become%20A%20Rainmaker%20The%20Rules%20For%20Getting%20And%20Keeping%20Customers%20And%20Clients.pdf

Table of Contents Onan Parts And Service Manuals

1. Understanding the eBook Onan Parts And Service Manuals
    - The Rise of Digital Reading Onan Parts And Service Manuals
    - Advantages of eBooks Over Traditional Books
2. Identifying Onan Parts And Service Manuals
    - Exploring Different Genres
    - Considering Fiction vs. Non-Fiction
    - Determining Your Reading Goals
3. Choosing the Right eBook Platform
    - Popular eBook Platforms
    - Features to Look for in an Onan Parts And Service Manuals
    - User-Friendly Interface

4. Exploring eBook Recommendations from Onan Parts And Service Manuals
    - Personalized Recommendations
    - Onan Parts And Service Manuals User Reviews and Ratings
    - Onan Parts And Service Manuals and Bestseller Lists
5. Accessing Onan Parts And Service Manuals Free and Paid eBooks
    - Onan Parts And Service Manuals Public Domain eBooks
    - Onan Parts And Service Manuals eBook Subscription Services
    - Onan Parts And Service Manuals Budget-Friendly Options
6. Navigating Onan Parts And Service Manuals eBook Formats
    - ePub, PDF, MOBI, and More
    - Onan Parts And Service Manuals Compatibility with Devices
    - Onan Parts And Service Manuals Enhanced eBook Features
7. Enhancing Your Reading Experience
    - Adjustable Fonts and Text Sizes of Onan Parts And Service Manuals
    - Highlighting and Note-Taking Onan Parts And Service Manuals
    - Interactive Elements Onan Parts And Service Manuals
8. Staying Engaged with Onan Parts And Service Manuals
    - Joining Online Reading Communities
    - Participating in Virtual Book Clubs
    - Following Authors and Publishers Onan Parts And Service Manuals
9. Balancing eBooks and Physical Books Onan Parts And Service Manuals
    - Benefits of a Digital Library
    - Creating a Diverse Reading Collection Onan Parts And Service Manuals
10. Overcoming Reading Challenges
    - Dealing with Digital Eye Strain
    - Minimizing Distractions
    - Managing Screen Time
11. Cultivating a Reading Routine Onan Parts And Service Manuals
    - Setting Reading Goals Onan Parts And Service Manuals
    - Carving Out Dedicated Reading Time

12. Sourcing Reliable Information of Onan Parts And Service Manuals
    - Fact-Checking eBook Content of Onan Parts And Service Manuals
    - Distinguishing Credible Sources
13. Promoting Lifelong Learning
    - Utilizing eBooks for Skill Development
    - Exploring Educational eBooks
14. Embracing eBook Trends
    - Integration of Multimedia Elements
    - Interactive and Gamified eBooks

Onan Parts And Service Manuals Introduction

In the digital age, access to information has become easier than ever before. The ability to download Onan Parts And Service Manuals has revolutionized the way we consume written content. Whether you are a student looking for course material, an avid reader searching for your next favorite book, or a professional seeking research papers, the option to download Onan Parts And Service Manuals has opened up a world of possibilities. Downloading Onan Parts And Service Manuals provides numerous advantages over physical copies of books and documents. Firstly, it is incredibly convenient. Gone are the days of carrying around heavy textbooks or bulky folders filled with papers. With the click of a button, you can gain immediate access to valuable resources on any device. This convenience allows for efficient studying, researching, and reading on the go. Moreover, the cost-effective nature of downloading Onan Parts And Service Manuals has democratized knowledge. Traditional books and academic journals can be expensive, making it difficult for individuals with limited financial resources to access information. By offering free PDF downloads, publishers and authors are enabling a wider audience to benefit from their work. This inclusivity promotes equal opportunities for learning and personal growth. There are numerous websites and platforms where individuals can download Onan Parts And Service Manuals. These websites range from academic databases offering research papers and journals to online libraries with an expansive collection of books from various genres. Many authors and publishers also upload their work to specific websites, granting readers access to their content without any charge. These platforms not only provide access to existing literature but also serve as an excellent platform for undiscovered authors to share their work with the world. However, it is essential to be cautious while downloading Onan Parts And Service Manuals. Some websites may offer pirated or illegally obtained copies of copyrighted material. Engaging in such activities not only violates copyright laws but also undermines the efforts of authors, publishers, and researchers. To ensure ethical downloading, it is advisable to utilize reputable websites that prioritize the legal distribution of content. When

downloading Onan Parts And Service Manuals, users should also consider the potential security risks associated with online platforms. Malicious actors may exploit vulnerabilities in unprotected websites to distribute malware or steal personal information. To protect themselves, individuals should ensure their devices have reliable antivirus software installed and validate the legitimacy of the websites they are downloading from. In conclusion, the ability to download Onan Parts And Service Manuals has transformed the way we access information. With the convenience, cost-effectiveness, and accessibility it offers, free PDF downloads have become a popular choice for students, researchers, and book lovers worldwide. However, it is crucial to engage in ethical downloading practices and prioritize personal security when utilizing online platforms. By doing so, individuals can make the most of the vast array of free PDF resources available and embark on a journey of continuous learning and intellectual growth.

FAQs About Onan Parts And Service Manuals Books

1. Where can I buy Onan Parts And Service Manuals books? Bookstores: Physical bookstores like Barnes & Noble, Waterstones, and independent local stores. Online Retailers: Amazon, Book Depository, and various online bookstores offer a wide range of books in physical and digital formats.
2. What are the different book formats available? Hardcover: Sturdy and durable, usually more expensive. Paperback: Cheaper, lighter, and more portable than hardcovers. E-books: Digital books available for e-readers like Kindle or software like Apple Books, Kindle, and Google Play Books.
3. How do I choose a Onan Parts And Service Manuals book to read? Genres: Consider the genre you enjoy (fiction, non-fiction, mystery, sci-fi, etc.). Recommendations: Ask friends, join book clubs, or explore online reviews and recommendations. Author: If you like a particular author, you might enjoy more of their work.
4. How do I take care of Onan Parts And Service Manuals books? Storage: Keep them away from direct sunlight and in a dry environment. Handling: Avoid folding pages, use bookmarks, and handle them with clean hands. Cleaning: Gently dust the covers and pages occasionally.
5. Can I borrow books without buying them? Public Libraries: Local libraries offer a wide range of books for borrowing. Book Swaps: Community book exchanges or online platforms where people exchange books.
6. How can I track my reading progress or manage my book collection? Book Tracking Apps: Goodreads, LibraryThing, and Book Catalogue are popular apps for tracking your reading progress and managing book collections. Spreadsheets: You can create your own spreadsheet to track books read, ratings, and other details.

7. What are Onan Parts And Service Manuals audiobooks, and where can I find them? Audiobooks: Audio recordings of books, perfect for listening while commuting or multitasking. Platforms: Audible, LibriVox, and Google Play Books offer a wide selection of audiobooks.
8. How do I support authors or the book industry? Buy Books: Purchase books from authors or independent bookstores. Reviews: Leave reviews on platforms like Goodreads or Amazon. Promotion: Share your favorite books on social media or recommend them to friends.
9. Are there book clubs or reading communities I can join? Local Clubs: Check for local book clubs in libraries or community centers. Online Communities: Platforms like Goodreads have virtual book clubs and discussion groups.
10. Can I read Onan Parts And Service Manuals books for free? Public Domain Books: Many classic books are available for free as theyre in the public domain. Free E-books: Some websites offer free e-books legally, like Project Gutenberg or Open Library.

Find Onan Parts And Service Manuals :

how to become a rainmaker the rules for getting and keeping customers and clients
natures way to health juice therapy
non sono razzista ma italian edition
2002 holden rodeo manual
1996 seadoo xp shop manual
~~france ski guide~~
activated sludge manual of practice 9
x2 2100 service manual
earth science guided study workbook answers ch9
fall foliage the mystery science and folklore of autumn leaves
garden conifers in colour
porsche 911 carrera 1993 1998 service repair workshop manual
2nd term exam time table ss2
manual alfa beta
~~federal income tax examples & explanations 4th~~

Onan Parts And Service Manuals :

penyelesaian masalah syarat batas persamaan diferensial - Jul 03 2022
web menyelesaikan masalah syarat batas sistem persamaan diferensial biasa tujuannya ialah agar pengguna dapat mempergunakan bvode setelah membaca uraian penggunaannya penggunaan rutin digambarkan dengan tiga contoh yang memperlihatkan kegunaannya pendahuluan persamaan diferensial biasa pdb sering muncul

penyelesaian persamaan diferensial parsial menggunakan - Aug 04 2022
web persamaan diferensial parsial transformasi laplace banyak digunakan dalam menyelesaikan masalah syarat awal dan syarat batas syarat awal merupakan kondisi yang harus dipenuhi pada awal waktu tertentu sedangkan syarat batas adalah syarat syarat tertentu atau kondisi kondisi tertentu yang terlibat

pdf penyelesaian masalah syarat batas dalam persamaan diferensial - Jun 14 2023
web jan 1 2017 tidak semua aplikasi persamaan diferensial menyelesaikan masalah syarat batas dalam persamaan mempunyai syarat awal tetapi memberikan syarat diferensial biasa orde dua dengan menggunakan batas pada lebih dari satu titik sehingga metode yang algoritma shooting neural networks digunakan adalah penyelesaian masalah syarat

masalah syarat batas msb pdf free download - Jun 02 2022
web 5 masalah nilai awal syarat batas mnasb bila state u tidak hanya bergantung pada variabel lokasi spasial tetapi juga waktu time yaitu u u x t x Ω dan t 0 t maka diperoleh masalah nilai awal dan syarat batas contoh persamaan gelombang dimensi dua 2 u x u y 2 1 2 u c 2 t 2 x y Ω t 0 u x y t 0 x y Ω t 0 3

masalah syarat batas bebas persamaan diferensial - Nov 07 2022
web dengan syarat batas dan syarat awal u 0 t α t 1 2 u s t t 0 1 3 u x s t t λ ds dt 1 4 s 0 0 1 5 dengan notasi sebagai berikut u menyatakan suhu dalam fluida di an tara dinding x 0 yang bersuhu α t dan batas s t yang tidak dike tahui dan bergerak sebagai batas antara fluida dan es

pdb masalah nilai awal mna dan masalah nilai batas mnb - Sep 05 2022
web materi persamaan diferensial biasa pdb pada topik masalah nilai awal dan masalah nilai batas mnb

persamaan diferensial masalah nilai awal dan syarat batas - Dec 08 2022
web mar 19 2022 about press copyright contact us creators advertise developers terms privacy policy safety how youtube works test new features nfl sunday ticket press copyright

masalah nilai batas direktori file upi - Apr 12 2023
web persamaan diferensial 1 bersama sama dengan syarat awal 2 disebut suatu masalah nilai awal mna kita ingin mencari suatu penyelesaian y x dari persamaan diferensial 1 yang memenuhi syarat pada titik akhir dari selang a x b sebagai contoh a a dan dengan b b 3 dan b dua buah konstanta

bab i konsep dasar persamaan diferensial - Mar 11 2023
web persamaan diferensial adalah persamaan yang melibatkan variabel variabel tak bebas dan derivatif derivatifnya terhadap variabel variabel bebas berikut ini adalah contoh persamaan diferensial 4 3 2 1 6 0 3 10 4 0 var bebas x var bebas x var bebas t var bebas x y var takbebas y
doc makalah nilai awal syarat batas tentang persamaan diferensial - Dec 28 2021
web isi buku fisika kuantum ini mencakup keterbatasan mekanika klasik fenomena kuantum persamaan schrodinger aljabar operator dan prinsip simetris bola secara khusus buku ini diperuntukkan bagi mahasiswa jurusan fisika dan atau jurusan pendidikan fisika semester v dan sedang mengambil mata kuliah fisika kuantum
persamaan differensial parsial masalah syarat awal dan syarat batas - May 13 2023
web jun 18 2020 perkuliahan jarak jauhdosen pengampu muhammad manaqib m scmata kuliah persamaan differensial parsialmateri masalah syarat awal dan syarat batas non ho
persamaan diferensial parsial masalah masalah nilai awal dan syarat batas - Aug 16 2023
web 2 6 masalah masalah nilai awal dan syarat batas suatu persamaan diffrensial memiliki lebih dari satu solusi agar dapat diperoleh solusi tunggal dari persamaan diferensial tersebut maka ditentukanlah suatu kondisi kondisi itu sendiri terdiri dari dua bagian yaitu kondisi awal dan 29 kondisi batas
penyelesaian masalah nilai batas persamaan diferensial - Jul 15 2023
web suatu persamaan diferensial bersama dengan kondisi kondisi tambahan terhadap fungsi yang dicari dan turunannya yang semuanya diberikan pada nilai variabel bebas yang sama maka disebut permasalahan diferensial dengan nilai awal
masalah nilai awal dan syarat batas 123dok - Feb 27 2022
web 1 5 masalah nilai awal dan syarat batas setiap persamaan differensial yang diberikan akan menimbulkan pertanyaan apakah persamaan differesial tersebut mempunyai selesaian jika mempunyai selesaian umum apakah selesaian tersebut tunggal untuk menjawab pertanyaan tersebut perlu dijelaskan terlebih dahulu tentang pengertian
penyelesaian masalah syarat batas persamaan diferensial biasa - Mar 31 2022
web diuraikan penggunaan rutin bvode di lingkungan scilab untuk menyelesaikan masalah syarat batas sistem persamaan diferensial biasa tujuannya ialah agar pengguna dapat mempergunakan bvode setelah membaca uraian penggunaannya penggunaan rutin digambarkan dengan tiga contoh yang memperlihatkan kegunaannya
penyelesaian masalah syarat batas persamaan diferensial - Oct 06 2022
web dan kita tuliskan masalah syarat batas persamaan diferensial aljabar 0 0 2 10 1 8 bilav dieliminasi akan diperoleh msb 2 2 2 0 20 0 2 10 1 9 msb di atas diimplementasikan dalam r sebagai berikut ini persamaan
masalah syarat awal dan syarat batas 123dok - May 01 2022

web masalah syarat awal dan syarat batas pada bagian ini akan disajikan teori tentang masalah syarat awal dan syarat batas yang mendukung pembahasan dari metode iterasi picard dengan referensi dari buku karangan kartono 2012 perhatikanlah persamaan diferensial linear orde dua 2 1 3 1 dengan 2 1 dan dinamakan koefisien

bab ii kajian teori uny - Feb 10 2023

web diferensial parsial masalah nilai awal dan syarat batas masalah sturm liouville dan fungsi eigen deret fourier metode separasi variabel dan keadaan steady state a limit pemikiran tentang limit yang menyatakan bahwa berarti bahwa selisih antara dan dapat dibuat sekecil mungkin dengan

modul 1 terminologi dasar pdp uny - Jan 09 2023

web perilaku fungsi di batas domainnya suatu persamaan diferensial yang dilengkapi dengan syarat batas kemudian disebut dengan masalah syarat batas terdapat tiga jenis syarat batas yang muncul di banyak aplikasi disebut juga dengan syarat batas klasik sebagai berikut 1 jika diketahui nilai dari solusi di batas domainnya maka disebut syarat batas

penyelesaian masalah nilai batas persamaan diferensial mathieu hill - Jan 29 2022

web oct 31 2013 penelitian ini menjelaskan tentang penyelesaian masalah nilai batas pada persamaan diferensial mathieu hill yang akan manghasilkan suatu solusi dalam bentuk persamaan periodik

vazio hista rias de ma es que transformaram seus pdf - Apr 16 2023

aug 20 2023 vazio hista rias de ma es que transformaram seus 3 4 downloaded from uniport edu ng on august 20 2023 by guest historia de los victoriosisimos antigvos condes de barcelona francisco diago 2011 historia de la vida y hechos del emperador carlos v prudencio de sandoval 1614

vazio hista rias de ma es que transformaram seus - Jun 06 2022

vazio hista rias de ma es que transformaram seus recognizing the habit ways to get this ebook vazio hista rias de ma es que transformaram seus is additionally useful you have remained in right site to begin getting this info acquire the vazio hista rias de ma es que transformaram seus connect that we have enough money here and check out the link

vazio hista rias de ma es que transformaram seus - Mar 03 2022

aug 23 2023 vazio hista rias de ma es que transformaram seus 1 4 downloaded from uniport edu ng on august 23 2023 by guest vazio hista rias de ma es que transformaram seus when somebody should go to the books stores search foundation by shop shelf by shelf it is in reality problematic this is why we provide the books compilations in this website

renzo biasion wikipedia - Dec 12 2022

biografia nato a treviso nel 1914 ma di antica famiglia veneziana si trasferisce a venezia ove si diploma presso il locale liceo artistico ed insegna disegno nelle scuole secondarie nel 1940 all entrata in guerra dell italia nel secondo conflitto mondiale combatte sul fronte greco albanese come sottotenente di fanteria e inizia la stesura di un diario di guerra che andrà perduto

vazio hista rias de ma es que transformaram seus pdf - Sep 21 2023
dinoflagelados de las rías gallegas y de sus transformaciones en los moluscos gestión y mitigación de los episodios tóxicos jul 22 2022 rías de tinta jun 20 2022 esta obra reúne textos de escritoras modernas y contemporáneas siglos xix y xx en francés gallego e italiano acompañados de su traducción al castellano

vazio hista rias de ma es que transformaram seus pdf - Jun 18 2023
vazio hista rias de ma es que transformaram seus 1 vazio hista rias de ma es que transformaram seus história do comércio do maranhão 1612 1895 história do budismo em mianmar do mahayana ao greco budismo história da música popular brasileira sem preconceitos vol 2 historia del invictissimo y muy animoso cavallero y capitan don

vazio hista rias de ma es que transformaram seus wrbb neu - May 05 2022
vazio hista rias de ma es que transformaram seus 1 vazio hista rias de ma es que transformaram seus yeah reviewing a ebook vazio hista rias de ma es que transformaram seus could build up your near links listings this is just one of the solutions for you to be successful as understood deed does not suggest that you have fabulous points

vazio wikipédia a enciclopédia livre - Feb 02 2022
vazio esta é uma página de desambiguação que lista os artigos que podem ser associados a um ou vários títulos se uma ligação interna o conduziu até aqui sugerimos que a corrija para apontá la diretamente ao artigo adequado o wikcionário tem o verbete vazio vazio ou vazios pode referir se a vazio astronomia vazio sentimento

le tre versioni de il bacio di hayez milano italia - Aug 08 2022
nov 13 2015 catullo ne voleva mille hayez ne ha lasciati tre stiamo parlando di baci naturalmente e in particolare delle tre versioni de il bacio di francesco hayez in mostra presso le gallerie d italia di piazza della scala nell ambito di un esposizione che rievoca la vita e il percorso creativo del pittore protagonista del romanticismo e del risorgimento accanto a

vazio hista rias de ma es que transformaram seus pdf pdf - Oct 10 2022
jul 1 2023 in some cases you likewise complete not discover the notice vazio hista rias de ma es que transformaram seus pdf that you are looking for it will certainly squander the time however below similar to you visit this web page it will be fittingly enormously easy to get as with ease as download guide vazio hista rias de ma es que transformaram

vazio hista rias de ma es que transformaram seus download - May 17 2023
vazio hista rias de ma es que transformaram seus os dez mandamentos dec 05 2021 os dez mandamentos não são para pessoas religiosas que todos dias leem a bíblia na verdade são até para quem não crê no deus que o livro apresenta na verdade são ideais de deus para nós não são ideias pesados mas são absolutos

vazio hista rias de ma es que transformaram seus download - Jul 07 2022
vazio hista rias de ma es que transformaram seus downloaded from api publico pinheiro ma gov br by guest morse miguel

historia moral y philosophica en que se tratan las vidas de doze philosophos y principes antiguos y sus sentencias y hazañas

vazio hista rias de ma es que transformaram seus pdf - Apr 04 2022

jun 10 2023 vazio hista rias de ma es que transformaram seus pdf eventually you will entirely discover a additional experience and feat by spending more cash nevertheless when complete you bow to that you it is your enormously own become old to play reviewing habit in the midst of guides you could enjoy now is vazio hista rias de ma es que

vazio hista rias de ma es que transformaram seus download - Mar 15 2023

vazio hista rias de ma es que transformaram seus download only wrbb neu edu author brock jax subject historia de la muerte y glorioso martyrio del sancto innocente que llaman de la guardia natural de la ciudad de toledo con otros tractados de mucha doctrina y prouecho que son los de la plana seguiente

vazio hista rias de ma es que transformaram seus pdf - Sep 09 2022

vazio hista rias de ma es que transformaram seus pdf getting the books vazio hista rias de ma es que transformaram seus pdf now is not type of inspiring means you could not by yourself going considering ebook accretion or library or borrowing from your connections to admittance them this is an no question simple means to specifically get

hayao miyazaki a importância do vazio youtube - Jan 13 2023

hayao miyazaki é um dos maiores mestres dos filmes animados de todos os tempos diretor de filmes como a viagem de chihiro princesa mononoke e o castel

vazio hista rias de ma es que transformaram seus pdf book - Aug 20 2023

vazio hista rias de ma es que transformaram seus pdf this is likewise one of the factors by obtaining the soft documents of this vazio hista rias de ma es que transformaram seus pdf by online you might not require more time to spend to go to the ebook inauguration as competently as search for them

vazio hista rias de ma es que transformaram seus gary - Jul 19 2023

vazio hista rias de ma es que transformaram seus recognizing the artifice ways to acquire this book vazio hista rias de ma es que transformaram seus is additionally useful you have remained in right site to start getting this info acquire the vazio hista rias de ma es que transformaram seus member that we present here and check out the link

vazio hista rias de ma es que transformaram seus pdf - Nov 11 2022

vazio hista rias de ma es que transformaram seus a literary masterpiece that delves deep to the significance of words and their effect on our lives compiled by a renowned author this captivating

vazio hista rias de ma es que transformaram seus - Feb 14 2023

vazio hista rias de ma es que transformaram seus historia de la composicion del cuerpo humano historia del invictissimo y muy animoso cavallero y capitan don hernando de avalos marques de pescara con una adicion hecha por diego de fuentes

donde se trata la presa de africa y assi mismo la conquista de sena varia historia de la nueua españa

ondes de choc e mails de new york 2001 broché fnac - Jan 08 2023

web e mails de new york 2001 ondes de choc bernadette richard l age d homme rue ferou des milliers de livres avec la livraison chez vous en 1 jour ou en magasin avec 5 de réduction ondes de choc e mails de new york 2001 broché bernadette richard achat livre fnac

ondes de choc e mails de new york 2001 amazon ca - Aug 03 2022

web ondes de choc e mails de new york 2001 richard bernadette amazon ca books skip to main content ca hello select your address books select the department you want to search in search amazon ca en hello sign in account lists returns

ondes de choc e mails de new york 2001 bernadette richard - May 12 2023

web apr 17 2004 ondes de choc e mails de new york 2001 de bernadette richard catégorie s sciences humaines et exactes economie politique sociologie et actualités

ondes de choc e mails de new york 2001 amazon fr - Jun 01 2022

web noté 5 retrouvez ondes de choc e mails de new york 2001 et des millions de livres en stock sur amazon fr achetez neuf ou d occasion

ondes de choc e mails de new york 2001 viceversa letteratura - Apr 11 2023

web ondes de choc e mails de new york 2001 bernadette richard vai alla pagina autore di bernadette richard bernadette richard ondes de choc e mails de new york 2001 lausanne l Âge d homme 2003 cerca nelle biblioteche cerca nel mondo viceversa letteratura chi siamo

e mail adresi nasıl alınır e mail adresi oluşturma 2019 - Dec 27 2021

web sep 1 2019 e mail adresi oluşturma işlemleri seçeceğiniz e posta servisi ne olursa olsun birbiri ile benzerlik gösterir İstenen bilgiler ve doğrulama yöntemleri neredeyse aynıdır peki e mail

outlook gelen mailleri farklı adrese yönlendirme teknobur - Feb 26 2022

web jul 14 2018 zaman zaman iş dışında olduğumuzda mail takibi yapmak yada çalışma arkadaşımıza mailler yönlendirmek için outlook üzerinde kural oluşturma gereği duyabiliyoruz İnternette bu konu ile alakalı çok fazla kaynak göremediğimizden bu makaleyi paylaşma gereği duyduk outlook mail hesabınıza gelen mailleri farklı bir mail adresine

ondes de choc e mails de new york 2001 viceversa littérature - Jun 13 2023

web accéder à la page auteur de bernadette richard bernadette richard ondes de choc e mails de new york 2001 lausanne l Âge d homme 2003 recherchez dans les bibliothèques

onde de choc définition et explications techno science net - Jan 28 2022

web une onde de choc est un type d onde mécanique ou d une autre nature associé à l idée d une transition brutale elle peut

prendre la forme d une vague de haute pression et elle est alors souvent créée par une explosion ou un choc de forte intensité

ondes de choc e mails de new york 2001 viceversa literatur - Mar 10 2023

web bernadette richard ondes de choc e mails de new york 2001 lausanne l Âge d homme 2003

ondes de choc e mails de new york 2001 grand format - Feb 09 2023

web oct 20 2003 ondes de choc e mails de new york 2001 grand format bernadette richard note moyenne donner le premier avis ecrivain et journaliste bernadette richard se voit attribuer en 2001 une bourse d écriture à new york elle voudrait tâter de la science fiction lire la suite 16 00 neuf expédié sous 3 à 6 jours

ondes de choc e mails de new york 2001 grand format furet du - Dec 07 2022

web plongez vous dans le livre ondes de choc e mails de new york 2001 de bernadette richard au format grand format ajoutez le à votre liste de souhaits ou abonnez vous à l auteur bernadette richard furet du nord

ondes de choc e mails de new york 2001 bernadette richard - Jul 14 2023

web sep 11 2003 ecrivaine et journaliste bernadette richard se voit attribuer en 2001 la bourse d écriture de new york du canton de berne dès son arrivée elle expédie des mails à ses proches a son retour parmi 1800 e mails envoyés à ses correspondants quelques uns les ont conservés et l exhortent à publier cette chronique

ondes de choc e mails de new york 2001 librairie renaud bray - Oct 05 2022

web ecrivain et journaliste bernadette richard se voit attribuer en 2001 une bourse d écriture à new york elle voudrait tâter de la science fiction un genre qu elle n a jamais exploré ce qu elle ignore c est que moins de deux mois après son arrivée elle va être propulsée dans un scénario de sf que même hollywood n avait pas imaginé le u septembre 2001

ondes de choc e mails de new york 2001 google books - Aug 15 2023

web choix de quelque 180 messages électroniques envoyés de new york à plusieurs destinataires du 13 juillet 2001 au 31 janvier 2002

ondes de choc e mails de new york 2001 abebooks france - Nov 06 2022

web ondes de choc e mails de new york 2001 de richard bernadette sur abebooks fr isbn 10 2825118303 isbn 13 9782825118306 l age d homme 2003 couverture souple

ondes de choc e mails de new york 2001 romans librairie - Apr 30 2022

web ondes de choc e mails de new york 2001 romans mot de passe perdu créer un compte bouquiner par rubrique dvd religion au delà et après vie biographies défense de la foi et discernement doctrine et magistère Écrits mystiques Études bibliques Évangile et bible

ondes de choc e mails de new york 2001 leslibraires fr - Jul 02 2022

web oct 20 2003 découvrez et achetez ondes de choc e mails de new york 2001 e mai bernadette richard Âge d homme sur leslibraires fr

ondes de choc e mails de new york 2001 pdf uniport edu - Mar 30 2022

web ondes de choc e mails de new york 2001 1 5 downloaded from uniport edu ng on august 31 2023 by guest ondes de choc e mails de new york 2001 this is likewise one of the factors by obtaining the soft documents of this ondes de choc e mails de new york 2001 by online you might not require more period to spend to go to the book opening as well

ondes de choc e mails de new york 2001 pdf - Sep 04 2022

web reviewing ondes de choc e mails de new york 2001 unlocking the spellbinding force of linguistics in a fast paced world fueled by information and interconnectivity the spellbinding force of linguistics