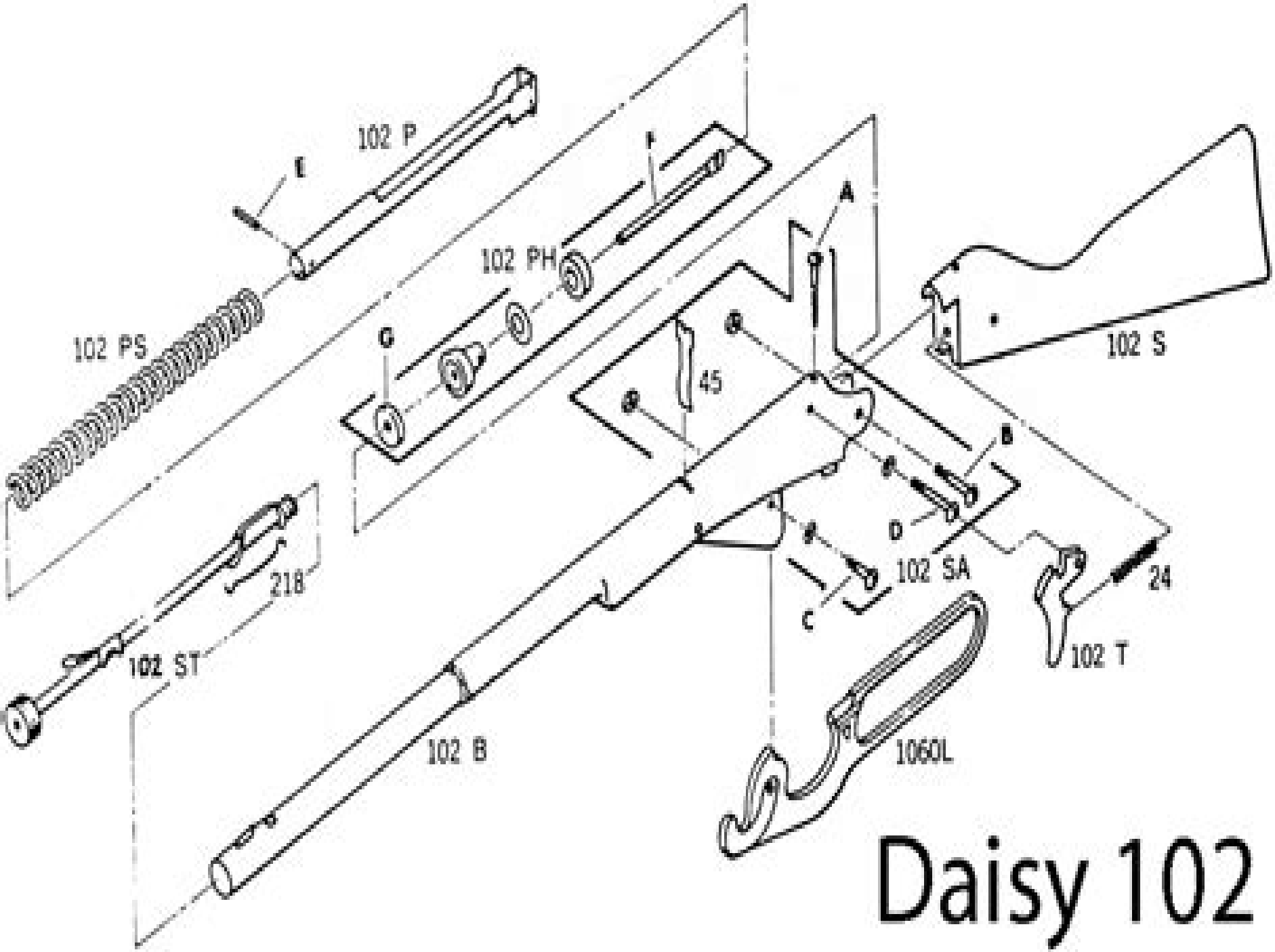
102 P
E
F
102 PH
102 PS
G
A
45
102 S
B
D
102 SA
C
24
102 T
218
102 ST
102 B
1060L

Daisy 102

Model 25 Daisy Bb Gun Repair Manual

L Towne

Model 25 Daisy Bb Gun Repair Manual:

Decoding **Model 25 Daisy Bb Gun Repair Manual**: Revealing the Captivating Potential of Verbal Expression

In a time characterized by interconnectedness and an insatiable thirst for knowledge, the captivating potential of verbal expression has emerged as a formidable force. Its capability to evoke sentiments, stimulate introspection, and incite profound transformations is genuinely awe-inspiring. Within the pages of "**Model 25 Daisy Bb Gun Repair Manual**," a mesmerizing literary creation penned by way of a celebrated wordsmith, readers set about an enlightening odyssey, unraveling the intricate significance of language and its enduring effect on our lives. In this appraisal, we shall explore the book is central themes, evaluate its distinctive writing style, and gauge its pervasive influence on the hearts and minds of its readership.

https://dev.flighttrampolinepark.com/book/scholarship/default.aspx/rigorous_schools_and_classrooms_leading_the_way.pdf

Table of Contents Model 25 Daisy Bb Gun Repair Manual

1. Understanding the eBook Model 25 Daisy Bb Gun Repair Manual
    - The Rise of Digital Reading Model 25 Daisy Bb Gun Repair Manual
    - Advantages of eBooks Over Traditional Books
2. Identifying Model 25 Daisy Bb Gun Repair Manual
    - Exploring Different Genres
    - Considering Fiction vs. Non-Fiction
    - Determining Your Reading Goals
3. Choosing the Right eBook Platform
    - Popular eBook Platforms
    - Features to Look for in an Model 25 Daisy Bb Gun Repair Manual
    - User-Friendly Interface
4. Exploring eBook Recommendations from Model 25 Daisy Bb Gun Repair Manual
    - Personalized Recommendations
    - Model 25 Daisy Bb Gun Repair Manual User Reviews and Ratings
    - Model 25 Daisy Bb Gun Repair Manual and Bestseller Lists

5. Accessing Model 25 Daisy Bb Gun Repair Manual Free and Paid eBooks
    - Model 25 Daisy Bb Gun Repair Manual Public Domain eBooks
    - Model 25 Daisy Bb Gun Repair Manual eBook Subscription Services
    - Model 25 Daisy Bb Gun Repair Manual Budget-Friendly Options
6. Navigating Model 25 Daisy Bb Gun Repair Manual eBook Formats
    - ePub, PDF, MOBI, and More
    - Model 25 Daisy Bb Gun Repair Manual Compatibility with Devices
    - Model 25 Daisy Bb Gun Repair Manual Enhanced eBook Features
7. Enhancing Your Reading Experience
    - Adjustable Fonts and Text Sizes of Model 25 Daisy Bb Gun Repair Manual
    - Highlighting and Note-Taking Model 25 Daisy Bb Gun Repair Manual
    - Interactive Elements Model 25 Daisy Bb Gun Repair Manual
8. Staying Engaged with Model 25 Daisy Bb Gun Repair Manual
    - Joining Online Reading Communities
    - Participating in Virtual Book Clubs
    - Following Authors and Publishers Model 25 Daisy Bb Gun Repair Manual
9. Balancing eBooks and Physical Books Model 25 Daisy Bb Gun Repair Manual
    - Benefits of a Digital Library
    - Creating a Diverse Reading Collection Model 25 Daisy Bb Gun Repair Manual
10. Overcoming Reading Challenges
    - Dealing with Digital Eye Strain
    - Minimizing Distractions
    - Managing Screen Time
11. Cultivating a Reading Routine Model 25 Daisy Bb Gun Repair Manual
    - Setting Reading Goals Model 25 Daisy Bb Gun Repair Manual
    - Carving Out Dedicated Reading Time
12. Sourcing Reliable Information of Model 25 Daisy Bb Gun Repair Manual
    - Fact-Checking eBook Content of Model 25 Daisy Bb Gun Repair Manual
    - Distinguishing Credible Sources
13. Promoting Lifelong Learning

    - Utilizing eBooks for Skill Development
    - Exploring Educational eBooks
14. Embracing eBook Trends
    - Integration of Multimedia Elements
    - Interactive and Gamified eBooks

Model 25 Daisy Bb Gun Repair Manual Introduction

In this digital age, the convenience of accessing information at our fingertips has become a necessity. Whether its research papers, eBooks, or user manuals, PDF files have become the preferred format for sharing and reading documents. However, the cost associated with purchasing PDF files can sometimes be a barrier for many individuals and organizations. Thankfully, there are numerous websites and platforms that allow users to download free PDF files legally. In this article, we will explore some of the best platforms to download free PDFs. One of the most popular platforms to download free PDF files is Project Gutenberg. This online library offers over 60,000 free eBooks that are in the public domain. From classic literature to historical documents, Project Gutenberg provides a wide range of PDF files that can be downloaded and enjoyed on various devices. The website is user-friendly and allows users to search for specific titles or browse through different categories. Another reliable platform for downloading Model 25 Daisy Bb Gun Repair Manual free PDF files is Open Library. With its vast collection of over 1 million eBooks, Open Library has something for every reader. The website offers a seamless experience by providing options to borrow or download PDF files. Users simply need to create a free account to access this treasure trove of knowledge. Open Library also allows users to contribute by uploading and sharing their own PDF files, making it a collaborative platform for book enthusiasts. For those interested in academic resources, there are websites dedicated to providing free PDFs of research papers and scientific articles. One such website is Academia.edu, which allows researchers and scholars to share their work with a global audience. Users can download PDF files of research papers, theses, and dissertations covering a wide range of subjects. Academia.edu also provides a platform for discussions and networking within the academic community. When it comes to downloading Model 25 Daisy Bb Gun Repair Manual free PDF files of magazines, brochures, and catalogs, Issuu is a popular choice. This digital publishing platform hosts a vast collection of publications from around the world. Users can search for specific titles or explore various categories and genres. Issuu offers a seamless reading experience with its user-friendly interface and allows users to download PDF files for offline reading. Apart from dedicated platforms, search engines also play a crucial role in finding free PDF files. Google, for instance, has an advanced search feature that allows users to filter results by file type. By specifying the file type as "PDF," users can find websites that offer free PDF downloads on a specific topic. While downloading Model 25 Daisy Bb Gun Repair Manual free PDF files is

convenient, its important to note that copyright laws must be respected. Always ensure that the PDF files you download are legally available for free. Many authors and publishers voluntarily provide free PDF versions of their work, but its essential to be cautious and verify the authenticity of the source before downloading Model 25 Daisy Bb Gun Repair Manual. In conclusion, the internet offers numerous platforms and websites that allow users to download free PDF files legally. Whether its classic literature, research papers, or magazines, there is something for everyone. The platforms mentioned in this article, such as Project Gutenberg, Open Library, Academia.edu, and Issuu, provide access to a vast collection of PDF files. However, users should always be cautious and verify the legality of the source before downloading Model 25 Daisy Bb Gun Repair Manual any PDF files. With these platforms, the world of PDF downloads is just a click away.

FAQs About Model 25 Daisy Bb Gun Repair Manual Books

What is a Model 25 Daisy Bb Gun Repair Manual PDF? A PDF (Portable Document Format) is a file format developed by Adobe that preserves the layout and formatting of a document, regardless of the software, hardware, or operating system used to view or print it. **How do I create a Model 25 Daisy Bb Gun Repair Manual PDF?** There are several ways to create a PDF: Use software like Adobe Acrobat, Microsoft Word, or Google Docs, which often have built-in PDF creation tools. Print to PDF: Many applications and operating systems have a "Print to PDF" option that allows you to save a document as a PDF file instead of printing it on paper. Online converters: There are various online tools that can convert different file types to PDF. **How do I edit a Model 25 Daisy Bb Gun Repair Manual PDF?** Editing a PDF can be done with software like Adobe Acrobat, which allows direct editing of text, images, and other elements within the PDF. Some free tools, like PDFescape or Smallpdf, also offer basic editing capabilities. **How do I convert a Model 25 Daisy Bb Gun Repair Manual PDF to another file format?** There are multiple ways to convert a PDF to another format: Use online converters like Smallpdf, Zamzar, or Adobe Acrobats export feature to convert PDFs to formats like Word, Excel, JPEG, etc. Software like Adobe Acrobat, Microsoft Word, or other PDF editors may have options to export or save PDFs in different formats. **How do I password-protect a Model 25 Daisy Bb Gun Repair Manual PDF?** Most PDF editing software allows you to add password protection. In Adobe Acrobat, for instance, you can go to "File" -> "Properties" -> "Security" to set a password to restrict access or editing capabilities. Are there any free alternatives to Adobe Acrobat for working with PDFs? Yes, there are many free alternatives for working with PDFs, such as: LibreOffice: Offers PDF editing features. PDFsam: Allows splitting, merging, and editing PDFs. Foxit Reader: Provides basic PDF viewing and editing capabilities. How do I compress a PDF file? You can use online tools like Smallpdf, ILovePDF, or desktop software like Adobe Acrobat to compress PDF files without significant quality loss. Compression reduces the file size, making it easier to share and download. Can I fill out forms in a

PDF file? Yes, most PDF viewers/editors like Adobe Acrobat, Preview (on Mac), or various online tools allow you to fill out forms in PDF files by selecting text fields and entering information. Are there any restrictions when working with PDFs? Some PDFs might have restrictions set by their creator, such as password protection, editing restrictions, or print restrictions. Breaking these restrictions might require specific software or tools, which may or may not be legal depending on the circumstances and local laws.

Find Model 25 Daisy Bb Gun Repair Manual :

rigorous schools and classrooms leading the way
river odyssey submarine outlaw
ricoh aficio 3045 service manual
ritual power healing and community compass
riverine force illustrated history of the vietnam war
rigby literacy teachers guide
rise kingins wife vivian blue
riders of the purple sage
~~ritrovarsi ritrovarsi~~
ricoh aficio 1800 l2 service manual
riemannian geometry a modern introduction cambridge studies in advanced mathematics
rnc obstetrics certification study guide
risk and the difficult poem
~~rns 315 user manual~~
rlss nplq bank of questions

Model 25 Daisy Bb Gun Repair Manual :

cianotipia fotografía antigua y alternativa kağıt kapak - Jul 15 2023
web cianotipia fotografía antigua y alternativa mrhar peter amazon com tr kitap
cianotipia fotografía antigua y alternativa mrhar peter - Jun 14 2023
web sobre este título reseña del editor cianotipia es un libro novedoso entre la variedad de libros existentes sobre procesos fotográficos tradicionales y alternativos ya que el autor presenta algunas técnicas antiguas y casi olvidadas que

cianotipia fotografía antigua y alternativa amazon com br - Feb 27 2022
web compre online cianotipia fotografía antigua y alternativa de mrhar peter na amazon frete grÁtis em milhares de produtos com o amazon prime encontre diversos livros escritos por mrhar peter com ótimos preços
cianotipia fotografía antigua y alternativa amazon it - Aug 04 2022
web cianotipia es un libro novedoso entre la variedad de libros existentes sobre procesos fotográficos tradicionales y alternativos ya que el autor presenta algunas técnicas antiguas y casi olvidadas que no es posible encontrar en ningún libro reciente
cianotipia fotografia antigua y alternativa - Feb 10 2023
web cianotipia es un libro novedoso entre la variedad de libros existentes sobre procesos fotográficos tradicionales y alternativos ya que el autor presenta algunas técnicas antiguas y casi olvidadas que no es posible encontrar en ningún libro reciente origen españa
amazon com cianotipia fotografía antigua y alternativa - Jan 09 2023
web amazon com cianotipia fotografía antigua y alternativa spanish edition 9781496108920 mrhar peter libros
cianotipia fotografia antigua y alternativa alibris - Jun 02 2022
web cianotipia es un libro novedoso entre la variedad de libros existentes sobre procesos fotogr ficos tradicionales y alternativos ya que el autor presenta algunas t cnicas antiguas y casi olvidadas que no es posible encontrar en ning n libro reciente
cianotipia fotografia antigua alternativa de peter mrhar iberlibro - Dec 08 2022
web cianotipia fotografia antigua y alternativa de peter mrhar y una gran selección de libros arte y artículos de colección disponible en iberlibro com
cianotipia fotografía antigua y alternativa tapa blanda - Aug 16 2023
web cianotipia es un libro novedoso entre la variedad de libros existentes sobre procesos fotográficos tradicionales y alternativos ya que el autor presenta algunas técnicas antiguas y casi olvidadas que no es posible encontrar en ningún libro reciente
cianotipia libro de fotografía antigua y alternativa - Mar 11 2023
web nov 15 2021 conocerás las antiguas técnicas de revelado que podrás aplicar en la actualidad en tus revelados caseros conocer estos pequeños detalles de los artistas de referencia es un gran avance para dar un paso más en tu creatividad
técnicas primitivas en fotografía la cianotipia workshop - Mar 31 2022
web jun 3 2019 fue así como surgió la cianotipia o blueprint un técnica primitiva de impresión que fue muy popular en el mundo de la fotografía este proceso se basa en la mezcla en proporción 1 1 es decir a partes iguales de dos compuestos

químicos una solución al 20 de citrato de hierro amoniacal y una solución al 8 de ferricianuro de

cianotipia fotografia antigua y alternativa mollye pdf - Dec 28 2021

web cianotipia fotografia antigua y alternativa verfasser peter mrhar isbn 6772856049008 libro you be able to obtain this ebook i bring downloads as a pdf amazon dx word txt ppt rar and zip there are many

cianotipia el resurgimiento de un proceso fotográfico del siglo xix - Nov 07 2022

web se trata del antiguo procedimiento de la cianotipia ideado en 1842 por el astrónomo john herschel durante sus inicios fue una técnica utilizada principalmente para copiar planos de arquitectura actualmente es utilizada para fines artísticos el centro de la imagen con el fin de capacitar a nuevos fotógrafos con estos procesos

la cianotipia como recurso en el arte contemporáneo una luz - Sep 05 2022

web de los procesos fotográficos antiguos y alternativos como alternative photography2 o analog forever magazine3 entre otros a través de internet también se difunde el día mundial de la cianotipia que se celebra desde 2015 el último sábado del mes de septiembre y que cuenta con su propia página web4 en españa también han

cianotipia fotografía antigua y alternativa pasta blanda - Jul 03 2022

web cianotipia fotografía antigua y alternativa mrhar peter amazon com mx libros identificarse eres un cliente nuevo empieza aquí listas crear una wish list mesa de regalos de bebé mesa de regalos de boda mi cuenta

gratis cianotipia fotografía antigua y alternativa de peter mrhar - Jan 29 2022

web jan 12 2020 reseña del editor cianotipia es un libro novedoso entre la variedad de libros existentes sobre procesos fotográficos tradicionales y alternativos ya que el autor presenta algunas técnicas antiguas y casi olvidadas que no es

cianotipia fotografia antigua y alternativa librería agapea - Oct 06 2022

web feb 28 2014 comprar el libro cianotipia fotografia antigua y alternativa de peter mrhar createspace 9781496108920 con envÍo gratis desde 18 en nuestra librería online agapea com ver opiniones resumen sinopsis del libro

cianotipia fotografía antigua y alternativa spanish edition - May 13 2023

web feb 28 2014 cianotipia es un libro novedoso entre la variedad de libros existentes sobre procesos fotográficos tradicionales y alternativos ya que el autor presenta algunas técnicas antiguas y casi olvidadas que no es posible encontrar en ningún libro reciente

cianotipia fotografia antigua y alternativa - Apr 12 2023

web cianotipia es un libro novedoso entre la variedad de libros existentes sobre procesos fotográficos tradicionales y alternativos ya que el autor presenta algunas técnicas antiguas y casi olvidadas que no es posible encontrar en ningún libro reciente

cianotipia fotografía antigua y alternativa by peter mrhar 2014 - May 01 2022

web feb 28 2014 find many great new used options and get the best deals for cianotipia fotografía antigua y alternativa by peter mrhar 2014 trade paperback at the best online prices at ebay free shipping for many products

3516c diesel generator sets scene7 - Dec 29 2022

web every cat engine is full load tested to ensure proper engine performance product support offered through global cat dealer network more than 2 200 dealer outlets caterpillar

3516c industrial diesel engines cat caterpillar - Jun 03 2023

web continuous operation at varying load and speed with duration of idle between applied loads typical load factor 40 50 engine performance is corrected to inlet air standard

manual 3516 cat pdf document - Oct 07 2023

web scan to find and purchase genuine cat parts and related service information language original instructions operation and maintenance manual 3512c and 3516c marine

caterpillar 3516c hd operation and maintenance manual - Mar 20 2022

web for your largest power needs in any environment cat 3516 industrial diesel engines offer the unsurpassed performance and durability your customers need to keep their

3516 land drilling engines and generator sets cat caterpillar - May 22 2022

web cat engine 3516 c parts manual pdf uploaded by reza 0 0 october 2021 pdf bookmark embed download this document was uploaded by user and they confirmed that they

3516c imo ii commercial propulsion engines cat caterpillar - Jul 24 2022

web mar 4 2021 reflect actual engine 3516c dimensions marine propulsion engine 3045 mhp 3003 bhp 2240 bkw 3194 mhp 3150 bhp 2350 bkw 3432 mhp 3385 bhp

3516 industrial diesel engines cat caterpillar - Dec 17 2021

3516c hd 2237 bkw 3000 bhp land well service engine - Feb 28 2023

web the cat 3516 industrial diesel engine is offered in ratings ranging from 1011 1492 bkw 1355 2000 bhp 1200 1800 rpm these ratings are non certified and are available for

3516 industrial diesel engines cat caterpillar - Sep 06 2023

web check out current offers for the 3516c view more offers the cat 3516c is offered at 1506 bkw 2100 bhp 1750 rpm this engine is available using epa u s flex

3516b generator set electric power - Jun 22 2022

web nov 22 2021 engine identification caterpillar engines are identified with serial numbers with performance specification

numbers and with arrangement numbers in some of the

operation and maintenance manual cat publications - Aug 05 2023

web the 3516c propulsion engine is available with a wide range cat data link engine diagnostics general alarm relay programmable parameters system application and

marine propulsion engine scene7 - Apr 20 2022

web get spare parts for caterpillar 3516c easily from our partners inquire the spare part you search for from our partners with a few easy steps and choose the best offer wether you

3516c generator set electric power - Oct 27 2022

web the 3516c propulsion engine is available with a wide range of ratings that meet imo ii regulations without any additional aftertreatment these engines provide efficient

cat mss new - Nov 27 2022

web engine specifications engine model 3516 ta v 16 4 stroke water cooled diesel compression ratio 13 0 1 the generators used on cat packages have been designed

3516c hd offshore generator set scene7 - Sep 25 2022

web if you are looking for a detailed specification sheet of the cat 3516b diesel generator set you can download it from this link this pdf document provides information on the

cat mss new - Aug 25 2022

web overview cat 3516 engines set the standard in the drilling industry for many years the 3500 has been the preferred choice by drillers due to their high performance durability

3516b industrial diesel engines cat caterpillar - Nov 15 2021

caterpillar 3516c specifications technical data 2022 2023 - Jan 18 2022

3516c generator set electric power emc cat com - Apr 01 2023

web aug 16 2017 cat diesel engine designed and optimized for low fuel consumption reliable performance proven in thousands of applications worldwide generator set

diesel generator sets scene7 - Jan 30 2023

web cat product support including dealer service parts and warranty covers the entire cat power system world wide product support cat dealers have over 1 800 dealer branch

cat engine 3516 c parts manual pdf x25d47l36lwp - Feb 16 2022

web for your largest power needs in any environment cat 3516b industrial diesel engines offer the unsurpassed performance and durability your customers need to keep their

cat mss new - May 02 2023

web sep 6 2017 3516c 60 hz 2050 2500 ekw u s epa tier 4 final spec sheet scene7learn about the features and benefits of the cat 3516c diesel generator set

3516c 60 hz 1650 2500 kw diesel generator cat - Jul 04 2023

web engine specifications engine model 3516c ataac v 16 4 stroke water cooled diesel bore 170 mm 6 69 in stroke std 190 mm 7 48 in stroke hd 215 mm 8 46 in

main event wwe in the raging 80s paperback - May 16 2023

web description every saturday night in the eighties fans would gather around their television to watch not saturday night live but saturday night the main event wwe wrestling

amazon com customer reviews main event wwe in the - Aug 07 2022

web dec 16 2017 an edition of main event wwe in the raging 80s

main event wwe in the raging 80s brian shields - Feb 13 2023

web main event wwe in the raging 80s dips into those years and reveals the most celebrated wrestlers and the matches that will be recalled as not just the best of the

10 most wwe important matches of the 1980s thesportster - Dec 31 2021

main event by brian shields ebook scribd - Apr 15 2023

web may 28 2010 the main event is a great look at when the wwe really took off in popularity the wwe went to cable tv and wrestling took off it covers all the

main event wwe in the raging 80s shields amazon com au - Jul 06 2022

web buy a cheap copy of main event wwe in the raging 80s wwe book by brian shields every saturday night in the eighties fans would gather around their television to watch

main event wwe in the raging 80s shields brian - Sep 20 2023

web jun 15 2010 main event wwe in the raging 80s dips into those years and reveals the most celebrated wrestlers and the matches that will be recalled as not just the best of the

main event wwe in the raging 80s by brian shields - Jun 17 2023

web main event wwe in the raging 80s dips into those years and reveals the most celebrated wrestlers and the matches that will be recalled as not just the best of the

main event on apple books - May 04 2022
web sep 27 2019 wwe had a cartoon its stars were appearing in movies and celebrities from all walks of life appeared at wwe events it was a fun time to be a wwe fan with
main event wwe in the raging 80s wwe book by brian - Mar 02 2022
web the eighties was the era that cemented wwe as the place where the best wrestlers on the planet worked main event wwe in the raging 80s dips into those years and reveals
buy main event wwe in the raging 80s book online at low - Jun 05 2022
web jun 15 2010 main event wwe in the raging 80s dips into those years and reveals the most celebrated wrestlers and the matches that will be recalled as not just the best of the
main event wwe in the raging 80s storytel - Oct 29 2021

hamas israel trade blame after gaza hospital blast ap news - Nov 29 2021

main event by brian shields overdrive - Feb 01 2022
web select the department you want to search in
main event wwe in the raging 80s open library - Apr 03 2022
web oct 18 2023 after blast kills hundreds at gaza hospital hamas and israel trade blame as rage spreads in region wounded palestinians wait for treatment in al shifa hospital in
main event wwe in the raging 80s by brian shields tertulia - Sep 08 2022
web jun 15 2010 the eighties was the era that cemented wwe as the place where the best wrestlers on the planet worked main event wwe in the raging 80s dips into those
main event wwe in the raging 80s brian shields google books - Mar 14 2023
web wwe wrestling beat the ratings for the most talked about show on television week after week here is that era captured introducing your champion from venice beach
main event wwe in the raging 80s kağıt kapak amazon com tr - Jul 18 2023
web jun 15 2010 main event wwe in the raging 80s show full title by brian shields 3 5 2 ratings about this ebook every saturday night in the eighties fans would gather around
main event wwe in the raging 80s kindle edition amazon in - Sep 27 2021

main event wwe in the raging 80s google books - Aug 19 2023

web arama yapmak istediğiniz kategoriyi seçin

main event wwe in the raging 80s amazon com - Oct 09 2022

web amazon in buy main event wwe in the raging 80s book online at best prices in india on amazon in read main event wwe in the raging 80s book reviews author details

main event wwe in the raging 80s kindle edition amazon ca - Jan 12 2023

web nov 7 2006 the eighties was the era that cemented wwe as the place where the best wrestlers on the planet worked main event wwe in the raging 80s dips into those

main event ebook by brian shields official publisher page - Nov 10 2022

web main event wwe in the raging 80s shields on amazon com au free shipping on eligible orders main event wwe in the raging 80s

main event wwe in the raging 80s kindle edition amazon co uk - Dec 11 2022

web the main event is a great look at when the wwe really took off in popularity the wwe went to cable tv and wrestling took off it covers all the