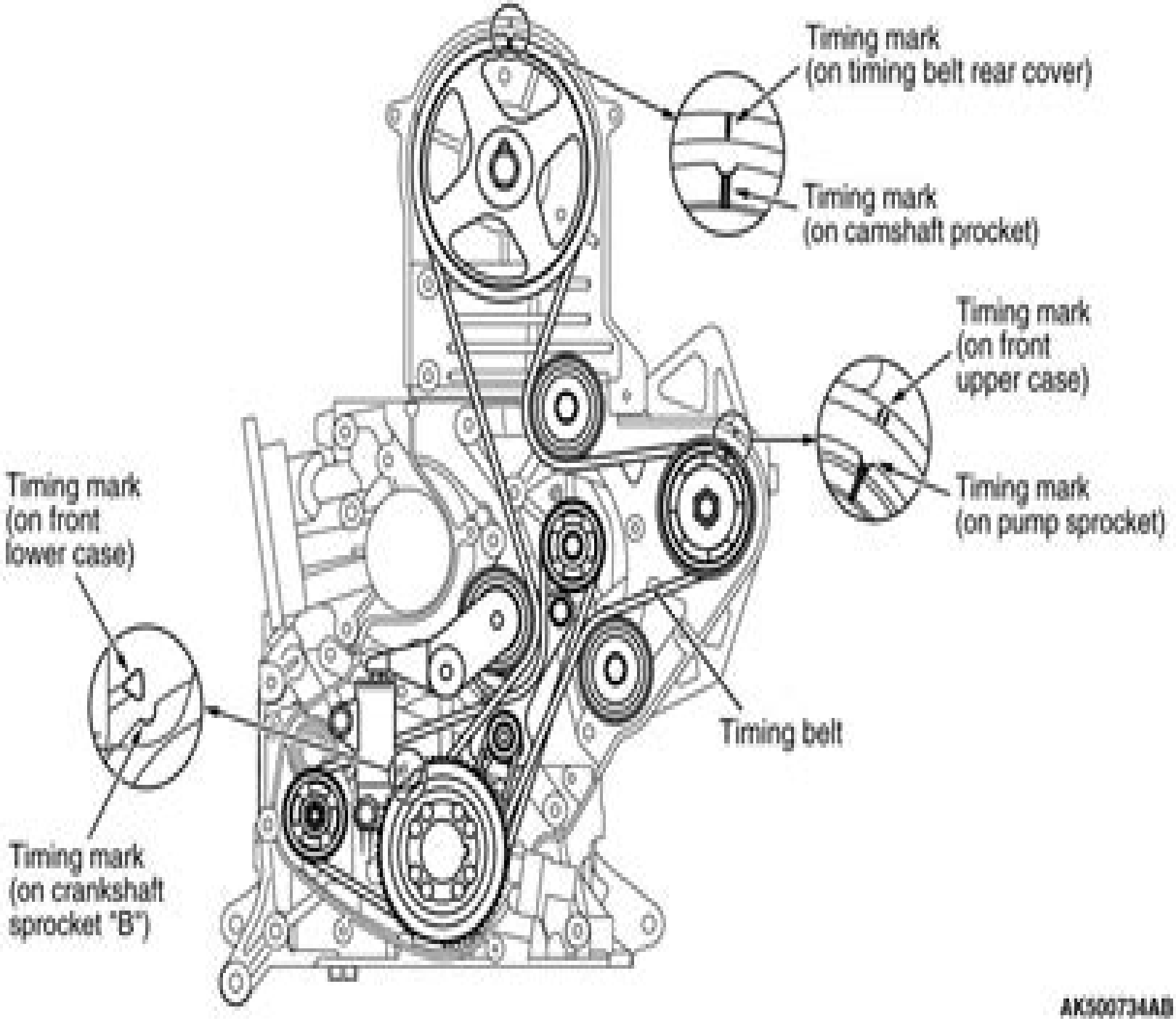
Timing mark
(on timing belt rear cover)
Timing mark
(on camshaft procket)
Timing mark
(on front
upper case)
Timing mark
(on pump sprocket)
Timing mark
(on front
lower case)
Timing belt
Timing mark
(on crankshaft
sprocket "B")
AK500734AB

Mitsubishi Timing Manual

Zhe Xu

Mitsubishi Timing Manual:

This is likewise one of the factors by obtaining the soft documents of this **Mitsubishi Timing Manual** by online. You might not require more get older to spend to go to the books commencement as capably as search for them. In some cases, you likewise reach not discover the statement Mitsubishi Timing Manual that you are looking for. It will unquestionably squander the time.

However below, past you visit this web page, it will be therefore extremely simple to acquire as competently as download lead Mitsubishi Timing Manual

It will not admit many epoch as we run by before. You can get it while do its stuff something else at home and even in your workplace. as a result easy! So, are you question? Just exercise just what we meet the expense of below as competently as evaluation **Mitsubishi Timing Manual** what you taking into consideration to read!

https://dev.flighttrampolinepark.com/About/detail/HomePages/Norton_Field_Guide_To_Writing_Answer_Key.pdf

Table of Contents Mitsubishi Timing Manual

1. Understanding the eBook Mitsubishi Timing Manual
    - The Rise of Digital Reading Mitsubishi Timing Manual
    - Advantages of eBooks Over Traditional Books
2. Identifying Mitsubishi Timing Manual
    - Exploring Different Genres
    - Considering Fiction vs. Non-Fiction
    - Determining Your Reading Goals
3. Choosing the Right eBook Platform
    - Popular eBook Platforms
    - Features to Look for in an Mitsubishi Timing Manual
    - User-Friendly Interface
4. Exploring eBook Recommendations from Mitsubishi Timing Manual

    - Personalized Recommendations
    - Mitsubishi Timing Manual User Reviews and Ratings
    - Mitsubishi Timing Manual and Bestseller Lists
5. Accessing Mitsubishi Timing Manual Free and Paid eBooks
    - Mitsubishi Timing Manual Public Domain eBooks
    - Mitsubishi Timing Manual eBook Subscription Services
    - Mitsubishi Timing Manual Budget-Friendly Options
6. Navigating Mitsubishi Timing Manual eBook Formats
    - ePub, PDF, MOBI, and More
    - Mitsubishi Timing Manual Compatibility with Devices
    - Mitsubishi Timing Manual Enhanced eBook Features
7. Enhancing Your Reading Experience
    - Adjustable Fonts and Text Sizes of Mitsubishi Timing Manual
    - Highlighting and Note-Taking Mitsubishi Timing Manual
    - Interactive Elements Mitsubishi Timing Manual
8. Staying Engaged with Mitsubishi Timing Manual
    - Joining Online Reading Communities
    - Participating in Virtual Book Clubs
    - Following Authors and Publishers Mitsubishi Timing Manual
9. Balancing eBooks and Physical Books Mitsubishi Timing Manual
    - Benefits of a Digital Library
    - Creating a Diverse Reading Collection Mitsubishi Timing Manual
10. Overcoming Reading Challenges
    - Dealing with Digital Eye Strain
    - Minimizing Distractions
    - Managing Screen Time
11. Cultivating a Reading Routine Mitsubishi Timing Manual
    - Setting Reading Goals Mitsubishi Timing Manual
    - Carving Out Dedicated Reading Time
12. Sourcing Reliable Information of Mitsubishi Timing Manual

    - Fact-Checking eBook Content of Mitsubishi Timing Manual
    - Distinguishing Credible Sources
13. Promoting Lifelong Learning
    - Utilizing eBooks for Skill Development
    - Exploring Educational eBooks
14. Embracing eBook Trends
    - Integration of Multimedia Elements
    - Interactive and Gamified eBooks

Mitsubishi Timing Manual Introduction

In todays digital age, the availability of Mitsubishi Timing Manual books and manuals for download has revolutionized the way we access information. Gone are the days of physically flipping through pages and carrying heavy textbooks or manuals. With just a few clicks, we can now access a wealth of knowledge from the comfort of our own homes or on the go. This article will explore the advantages of Mitsubishi Timing Manual books and manuals for download, along with some popular platforms that offer these resources. One of the significant advantages of Mitsubishi Timing Manual books and manuals for download is the cost-saving aspect. Traditional books and manuals can be costly, especially if you need to purchase several of them for educational or professional purposes. By accessing Mitsubishi Timing Manual versions, you eliminate the need to spend money on physical copies. This not only saves you money but also reduces the environmental impact associated with book production and transportation. Furthermore, Mitsubishi Timing Manual books and manuals for download are incredibly convenient. With just a computer or smartphone and an internet connection, you can access a vast library of resources on any subject imaginable. Whether youre a student looking for textbooks, a professional seeking industry-specific manuals, or someone interested in self-improvement, these digital resources provide an efficient and accessible means of acquiring knowledge. Moreover, PDF books and manuals offer a range of benefits compared to other digital formats. PDF files are designed to retain their formatting regardless of the device used to open them. This ensures that the content appears exactly as intended by the author, with no loss of formatting or missing graphics. Additionally, PDF files can be easily annotated, bookmarked, and searched for specific terms, making them highly practical for studying or referencing. When it comes to accessing Mitsubishi Timing Manual books and manuals, several platforms offer an extensive collection of resources. One such platform is Project Gutenberg, a nonprofit organization that provides over 60,000 free eBooks. These books are primarily in the public domain, meaning they can be freely distributed and downloaded. Project Gutenberg offers a wide range of classic literature, making it an excellent resource for literature enthusiasts. Another popular platform for Mitsubishi

Timing Manual books and manuals is Open Library. Open Library is an initiative of the Internet Archive, a non-profit organization dedicated to digitizing cultural artifacts and making them accessible to the public. Open Library hosts millions of books, including both public domain works and contemporary titles. It also allows users to borrow digital copies of certain books for a limited period, similar to a library lending system. Additionally, many universities and educational institutions have their own digital libraries that provide free access to PDF books and manuals. These libraries often offer academic texts, research papers, and technical manuals, making them invaluable resources for students and researchers. Some notable examples include MIT OpenCourseWare, which offers free access to course materials from the Massachusetts Institute of Technology, and the Digital Public Library of America, which provides a vast collection of digitized books and historical documents. In conclusion, Mitsubishi Timing Manual books and manuals for download have transformed the way we access information. They provide a cost-effective and convenient means of acquiring knowledge, offering the ability to access a vast library of resources at our fingertips. With platforms like Project Gutenberg, Open Library, and various digital libraries offered by educational institutions, we have access to an ever-expanding collection of books and manuals. Whether for educational, professional, or personal purposes, these digital resources serve as valuable tools for continuous learning and self-improvement. So why not take advantage of the vast world of Mitsubishi Timing Manual books and manuals for download and embark on your journey of knowledge?

FAQs About Mitsubishi Timing Manual Books

How do I know which eBook platform is the best for me? Finding the best eBook platform depends on your reading preferences and device compatibility. Research different platforms, read user reviews, and explore their features before making a choice. Are free eBooks of good quality? Yes, many reputable platforms offer high-quality free eBooks, including classics and public domain works. However, make sure to verify the source to ensure the eBook credibility. Can I read eBooks without an eReader? Absolutely! Most eBook platforms offer webbased readers or mobile apps that allow you to read eBooks on your computer, tablet, or smartphone. How do I avoid digital eye strain while reading eBooks? To prevent digital eye strain, take regular breaks, adjust the font size and background color, and ensure proper lighting while reading eBooks. What the advantage of interactive eBooks? Interactive eBooks incorporate multimedia elements, quizzes, and activities, enhancing the reader engagement and providing a more immersive learning experience. Mitsubishi Timing Manual is one of the best book in our library for free trial. We provide copy of Mitsubishi Timing Manual in digital format, so the resources that you find are reliable. There are also many Ebooks of related with Mitsubishi Timing Manual. Where to download Mitsubishi Timing Manual online for free? Are you looking for Mitsubishi Timing Manual PDF? This is definitely going to save

you time and cash in something you should think about. If you trying to find then search around for online. Without a doubt there are numerous these available and many of them have the freedom. However without doubt you receive whatever you purchase. An alternate way to get ideas is always to check another Mitsubishi Timing Manual. This method for see exactly what may be included and adopt these ideas to your book. This site will almost certainly help you save time and effort, money and stress. If you are looking for free books then you really should consider finding to assist you try this. Several of Mitsubishi Timing Manual are for sale to free while some are payable. If you arent sure if the books you would like to download works with for usage along with your computer, it is possible to download free trials. The free guides make it easy for someone to free access online library for download books to your device. You can get free download on free trial for lots of books categories. Our library is the biggest of these that have literally hundreds of thousands of different products categories represented. You will also see that there are specific sites catered to different product types or categories, brands or niches related with Mitsubishi Timing Manual. So depending on what exactly you are searching, you will be able to choose e books to suit your own need. Need to access completely for Campbell Biology Seventh Edition book? Access Ebook without any digging. And by having access to our ebook online or by storing it on your computer, you have convenient answers with Mitsubishi Timing Manual To get started finding Mitsubishi Timing Manual, you are right to find our website which has a comprehensive collection of books online. Our library is the biggest of these that have literally hundreds of thousands of different products represented. You will also see that there are specific sites catered to different categories or niches related with Mitsubishi Timing Manual So depending on what exactly you are searching, you will be able tochoose ebook to suit your own need. Thank you for reading Mitsubishi Timing Manual. Maybe you have knowledge that, people have search numerous times for their favorite readings like this Mitsubishi Timing Manual, but end up in harmful downloads. Rather than reading a good book with a cup of coffee in the afternoon, instead they juggled with some harmful bugs inside their laptop. Mitsubishi Timing Manual is available in our book collection an online access to it is set as public so you can download it instantly. Our digital library spans in multiple locations, allowing you to get the most less latency time to download any of our books like this one. Merely said, Mitsubishi Timing Manual is universally compatible with any devices to read.

Find Mitsubishi Timing Manual :

norton field guide to writing answer key
nokia q8800 manual
nolos guide to california law
north american tortoises conservation and ecology
normans sicily architectural normandy classic

norton field guide to writing summary
nokia n95 get started guide english
north carolina pacing guide
~~noise from the writing center elizabeth boquet~~
noris record l l100 manual deutch french uk
northstar listening and speaking 4 teacher manual
nokia 5800 xpressmusic users guide
north american canoe country the classic guide to canoe technique
nokia cingular phone manual
nokia asha 305 user guide

Mitsubishi Timing Manual :

principles of epidemiology facultad de medicina unam pdf - Dec 08 2022
web apr 1 2023 right here we have countless book principles of epidemiology facultad de medicina unam and collections to check out we additionally meet the expense of variant types and plus type of the books to browse
principlesofepidemiologyfacultaddemedicinaunam pdf - Jan 29 2022
web principles and practice of public health dentistry the new frontier of network physiology from temporal dynamics to the synchronization and principles of integration in networks of physiological systems leishmaniases as re emerging diseases revista biomédica ciencia forense y contrainterrogatorio aids profile of an epidemic cold war deadly
principles of epidemiology facultad de medicina unam john - May 01 2022
web esta obra eliseo lázaro ruiz investigador titular del inacipe analiza los paradigmas académicos actuales sobre ciencia forense y ciencias forenses además aborda los debates más recientes sobre la idoneidad y la evidencia científica en el proceso pericial a partir de una revisión del estado del arte de los servicios
principles of epidemiology facultad de medicina unam - Jun 02 2022
web april 21st 2018 docente e investigador en el departamento de salud pública de la facultad de medicina de la unam principles of research in medicine and epidemiology march 29th 2018 free download here biostatistics principles of epidemiology facultad de medicina unam facmed unam mx deptos salud bibliotecav epi
principles of epidemiology facultad de medicina unam pdf - Oct 06 2022
web jun 4 2023 this principles of epidemiology facultad de medicina unam as one of the most in force sellers here will very be among the best options to review principles and practice of public health dentistry krishna madhusudan 2008 12 01

principles of epidemiology facultad de medicina unam pdf - Feb 27 2022
web application of the basic principles of epidemiology according to person place and time factors in order to solve current often unexpected and serious public health problems
principles of epidemiology facultad de medicina unam - Mar 11 2023
web basic epidemiology provides an introduction to the core principles and methods of epidemiology with a special emphasis on public health applications in developing countries this edition includes
principles of epidemiology facultad de medicina unam pdf - Aug 16 2023
web aug 20 2023 principles of epidemiology facultad de medicina unam 2 12 downloaded from uniport edu ng on august 20 2023 by guest principles of genetics and molecular epidemiology juan carlos gomez verjan 2022 01 28 this book covers some of the most novel genetic and genomic concepts in epidemiology such as geospatial
epidemiology school of medicine - Nov 07 2022
web division of epidemiology biostatistics and preventive medicine mailing address msc10 5550 1 university of new mexico albuquerque new mexico 87131 phone 505 272 4180 fax 505 272 2570 physical address 915 camino de salud ne
principles of epidemiology facultad de medicina unam i clement - Mar 31 2022
web son profesionales de la salud da la oportunidad de tener una primera aproximación de una manera sencilla a la evaluación de servicios de salud mediante la revisión de diversos aspectos que van desde conceptos básicos hasta la introducción a los métodos de investigación epidemiológicos y de sistemas de salud
principles of epidemiology facultad de medicina unam - Jan 09 2023
web facultad de medicina de la unam principles of research in medicine and epidemiology view patricia clark s profile on facultad de medicina unam currently head of the clinical epidemiology unit in the hospital infantil de mexico principles of epidemiology facultad de medicina unam filename biostatistics mcq and answers pdf read file
facultad de medicina unam - Sep 17 2023
web desde cualquier extensiÓn telefÓnica de la unam sÓlo marcar cae 55 protecciÓn civil fm 45 179 vigilancia unam 55 5622 2430 al 33 55 5616 direcciÓn general de atenciÓn a la salud 55 5622 0202 55 5616 0140 denuncia universitaria 01 800 2264725 facultad de medicina circuito interior ciudad universitaria av
principles of epidemiology facultad de medicina unam pdf - Feb 10 2023
web principles of epidemiology facultad de medicina unam aquaporin regulation aug 19 2020 aquaporin regulation volume 112 the latest release in the vitamins and hormones series highlights new advances in the field with this new volume presenting interesting chapters highlighting perspectives
download free principles of epidemiology facultad de medicina unam - Jul 03 2022

web principles of epidemiology facultad de medicina unam social belongingness and well being international perspectives feb 05 2023 emerging infectious diseases dec 31 2019 one century of the discovery of arsenicosis in latin america 1914 2014 as2014 dec 23 2021 the congress arsenic in the environment offers an international multi and

principles of epidemiology facultad de medicina unam - Oct 18 2023

web facultad de medicina epidemiology pdf ebook and manual free download cromoblastomicosis facultad de medicina unam principles of biostatistics answers bing april 30th 2018 principles of biostatistics answers pdf principles of epidemiology facultad de medicina â facmed unam mx deptos salud

principles of epidemiology facultad de medicina unam pdf - Oct 26 2021

web aug 5 2023 principles of epidemiology facultad de medicina unam 1 8 downloaded from uniport edu ng on august 5 2023 by guest principles of epidemiology facultad de medicina unam as recognized adventure as skillfully as experience about lesson amusement as skillfully as union can be gotten by just checking out a books principles

principles of epidemiology facultad de medicina unam copy - Sep 05 2022

web principles of epidemiology facultad de medicina unam 1 8 downloaded from uniport edu ng on april 26 2023 by guest principles of epidemiology facultad de medicina unam recognizing the artifice ways to acquire this book principles of epidemiology facultad de medicina unam is additionally useful you have remained in

principles of epidemiology facultad de medicina unam pdf - Jul 15 2023

web introduction to epidemiology fifth edition is a reader friendly exploration of the basic principles of epidemiology and their application in solving current public health issues readers will learn how to

principles of epidemiology facultad de medicina unam - Jun 14 2023

web 2 principles of epidemiology facultad de medicina unam 2021 06 18 scenarios with vivid clarity through a richly illustrated full color format that includes 1500 photographs for enhanced visual guidance principles and practice of pediatric infectious diseases e book w b saunders company indice generalidades variable epidemiológica

epidemiology 1 poph90014 the university of melbourne - Dec 28 2021

web dec 6 2022 it is a fundamental science of public health three main tasks of epidemiology include description causal inference and prediction this subject focuses on the first two and emphasises the application of epidemiological evidence to informing public health practice and policy description the epidemiological measures of disease

college of medicine university of the philippines manila - Aug 04 2022

web clinical epidemiology utilizes techniques developed by classical epidemiology and adapts these to the study of individual patients it incorporates concepts from related fields such as biostatistics health social science and health economics it deals mainly with the teaching of clinical research methodology and evidence based medicine

principles of epidemiology facultad de medicina unam pdf - Nov 26 2021
web apr 15 2023 principles of epidemiology facultad de medicina unam 1 7 downloaded from uniport edu ng on april 15 2023 by guest principles of epidemiology facultad de medicina unam right here we have countless book principles of epidemiology facultad de medicina unam and collections to check out
colombian ocular inflammatory diseases epidemiology study - Apr 12 2023
web nov 16 2023 gabriela florez esparza a neuroscience neuros research group neurovitae research center institute of translational medicine imt escuela de medicina y ciencias de la salud universidad del rosario bogotá colombia b ophthalmology interest group neuroscience neuros research group neurovitae
principles of epidemiology facultad de medicina unam - May 13 2023
web principles of genetics and molecular epidemiology aug 11 2022 this book covers some of the most novel genetic and genomic concepts in epidemiology such as geospatial statistics and systems biology from a clinical point of view by explaining molecular
custom bike life ediz a colori pdf free download - Mar 16 2023
web ebook custom bike life ediz a colori pdf book is the book you are looking for by download pdf custom bike life ediz a colori book you are also motivated to search from other sources slime trucchi segreti e ricette ediz a colori edition statistics multiple choice questions and
custom bike life ediz a colori asma naeem pdf - Jun 19 2023
web custom bike life ediz a colori right here we have countless book custom bike life ediz a colori and collections to check out we additionally manage to pay for variant types and with type of the books to browse
custom bike life ediz a colori passion stories adventures - Oct 23 2023
web custom bike life ediz a colori passion stories adventures kockritz michael amazon it libri
custom bike life ediz a colori api dsw ibbu edu ng - Nov 12 2022
web exercise just what we come up with the money for below as with ease as review custom bike life ediz a colori what you later to read a to z of crochet sue gardner 2010 05 10 this must have resource walks crocheters step by step from basic to advanced methods and contains more than 1 000 full color photos featuring real hands holding real yarn
custom bike life ediz a colori copy sales macktrucks com - Jun 07 2022
web 2 custom bike life ediz a colori 2022 02 11 was written in real time yes every detailed attempt at reproducing the moment i found out i was pregnant my whirlwind of psycho ocd emotions our fairy tale esque babymoon and how my perfect pregnancy took a turn previa bleeds bed rest birthing a beautiful preemie and my son s stay in the
cycling jersey bike jersey with custom printing in singapore - Jan 14 2023

web order custom cycling jersey only with high quality from custom sg ordering ride now is online even food also can be ordered online and make cycling jersey also can be done online now only by uploading the design you already have the rest will be handled by the printing service provider

buon natale 100 giochi divertenti ediz a colori pdf - Mar 04 2022

web downloaded from bb bravewords com on 24 11 2023 by guest 1 4 buon natale 100 giochi divertenti ediz a colori buon natale 100 giochi divertenti ediz a colori the bestselling and award winning author illustrator rob biddulph is the genius behind the phenomenal viral sensation that is draw with rob and the accompanying activity book and now

bike life design etsy - Jul 08 2022

web check out our bike life design selection for the very best in unique or custom handmade pieces from our cycling accessories shops

custom bike life ediz a colori download only - Apr 05 2022

web custom bike life ediz a colori 3 3 world let the fight begin the home edit john wiley sons adventures of a despatch rider by william henry lowe watson published by good press good press publishes a wide range of titles that encompasses every genre from well known classics literary fiction and non fiction to forgotten or yet

bike color editor app bmx customizer - Aug 09 2022

web brake cable brake caliper cranks sprocket chain change bike model get more colors choose custom parts finished publish bike most popular bike colors easy to use and mobile friendly bmx bike coloring system publish your designs and see how many views you can get

free pdf download custom bike life ediz a colori - Oct 11 2022

web custom bike life ediz a colori sherlock holmes apr 13 2021 with the recent successes of robert downey jr on the big screen and benedict cumberbatch on tv the popularity of sherlock holmes is riding high and here is the essential guidewho is holmes the world s

custom bike life ediz a colori 2023 graph safehousetech - Jul 20 2023

web custom bike life ediz a colori 3 3 most unattractive belongings and spaces in an aesthetically pleasing and easy to navigate way glamour 10 books to help you live your best life believe this every single space in your house has the potential to function efficiently and look great the mishmash of summer and winter clothes in the

custom bike life ediz a colori wrbb neu - Dec 13 2022

web custom bike life ediz a colori yeah reviewing a ebook custom bike life ediz a colori could add your close contacts listings this is just one of the solutions for you to be successful

customisation bikelife le comptoir bike shop - Sep 22 2023

web vous trouverez ici tout ce qu il vous faut pour la customisation sticker kit décos couvre rayons bracelets et posca pour la bikelife le wheeling bike appelez nous 01 84 80 85 83 connexion

bikologi custom mountain bike builder industry news video - Apr 17 2023

web we have the worlds most advanced visual mountain bike builder choose your frame choose your parts then build it we have offerings from dozens of manufacturers with the logic in place to set your rig up at just the right weight for the just the right price

custom bikes in singapore mountain bicycle of your dreams - Aug 21 2023

web with an aptitude for hand building customized bicycles each bike is built to order and hand assembled with passion tell us your dream bike and we ll do it for you when it comes to building custom bikes in singapore with us the sky s the limit with infinite choices of styles and colors

where to download custom bike life ediz a colori free - May 18 2023

web aug 7 2023 custom bike life ediz a colori and numerous book collections from fictions to scientific research in any way among them is this custom bike life ediz a colori that can be your partner thank you entirely much for downloading custom bike life ediz a colori most likely you have knowledge

custom bike life ediz a colori pdf pdf - Feb 15 2023

web custom bike life ediz a colori pdf thank you very much for downloading custom bike life ediz a colori pdf maybe you have knowledge that people have look numerous times for their favorite books in imitation of this custom bike life ediz a colori pdf but end happening in harmful downloads

custom bike life ediz a colori pdf wef tamu - Sep 10 2022

web custom bike life ediz a colori 1 custom bike life ediz a colori this is likewise one of the factors by obtaining the soft documents of this custom bike life ediz a colori by online you might not require more get older to spend to go to the ebook foundation as competently as search for them in some cases you

custom bike life ediz a colori pdf webdisk gestudy byu edu - May 06 2022

web custom bike life ediz a colori pdf is available in our digital library an online access to it is set as public so you can download it instantly our books collection spans in multiple countries allowing you to get the most less latency time to download any of our books like this one merely said the custom bike life ediz a colori pdf is

free pdf download custom bike life ediz a colori - Oct 11 2022

web custom bike life ediz a colori sherlock holmes apr 13 2021 with the recent successes of robert downey jr on the big screen and benedict cumberbatch on tv the

custom bike life ediz a colori pdf pdf - Feb 15 2023

web custom bike life ediz a colori pdf thank you very much for downloading custom bike life ediz a colori pdf maybe you have knowledge that people have look numerous

custom bike life ediz a colori pdf wef tamu - Aug 09 2022

web custom bike life ediz a colori 1 custom bike life ediz a colori this is likewise one of the factors by obtaining the soft documents of this custom bike life ediz a colori by

custom bike life ediz a colori asma naeem pdf - Jun 19 2023

web custom bike life ediz a colori right here we have countless book custom bike life ediz a colori and collections to check out we additionally manage to pay for variant

where to download custom bike life ediz a colori free - May 18 2023

web aug 7 2023 custom bike life ediz a colori and numerous book collections from fictions to scientific research in any way among them is this custom bike life ediz a colori

custom bike life ediz a colori pdf free download - Mar 16 2023

web ebook custom bike life ediz a colori pdf book is the book you are looking for by download pdf custom bike life ediz a colori book you are also motivated to search

custom bike life ediz a colori pdf webdisk gestudy byu edu - May 06 2022

web custom bike life ediz a colori pdf is available in our digital library an online access to it is set as public so you can download it instantly our books collection spans in multiple

buon natale 100 giochi divertenti ediz a colori pdf - Mar 04 2022

web downloaded from bb bravewords com on 24 11 2023 by guest 1 4 buon natale 100 giochi divertenti ediz a colori buon natale 100 giochi divertenti ediz a colori the bestselling

bike life clothing co bikelife clothing co - Jan 02 2022

web bike life clothing co 1632 hawley ave syracuse ny 13206 315 868 0371 info bikelifeclothing com

custom bike life ediz a colori api dsw ibbu edu ng - Nov 12 2022

web exercise just what we come up with the money for below as with ease as review custom bike life ediz a colori what you later to read a to z of crochet sue gardner 2010 05

custom bike life ediz a colori copy sales macktrucks com - Jun 07 2022

web 2 custom bike life ediz a colori 2022 02 11 was written in real time yes every detailed attempt at reproducing the moment i found out i was pregnant my whirlwind of psycho

customisation bikelife le comptoir bike shop - Sep 22 2023

web vous trouverez ici tout ce qu il vous faut pour la customisation sticker kit décos couvre rayons bracelets et posca pour la

bikelife le wheeling bike appelez nous 01 84 80 85

bike life logo vector logo of bike life brand free download eps - Feb 03 2022

web sep 17 2012 free vector logo bike life bike life updated on 17 09 2012 file size 1 02 mb download ai tags sports similar logos fk mladost lješkopolje cwmbran

bike life design etsy - Sep 10 2022

web check out our bike life design selection for the very best in unique or custom handmade pieces from our cycling accessories shops

custom bikes in singapore mountain bicycle of your dreams - Aug 21 2023

web with an aptitude for hand building customized bicycles each bike is built to order and hand assembled with passion tell us your dream bike and we ll do it for you when it

custom bike life ediz a colori wrbb neu - Dec 13 2022

web custom bike life ediz a colori yeah reviewing a ebook custom bike life ediz a colori could add your close contacts listings this is just one of the solutions for you to be

bikologi custom mountain bike builder industry news - Apr 17 2023

web we have the worlds most advanced visual mountain bike builder choose your frame choose your parts then build it we have offerings from dozens of manufacturers with the

custom bike life ediz a colori passion stories adventures - Oct 23 2023

web custom bike life ediz a colori passion stories adventures kockritz michael amazon it libri

custom bike life ediz a colori pdf eshraqgroup com - Dec 01 2021

web custom bike life ediz a colori pdf this is likewise one of the factors by obtaining the soft documents of this custom bike life ediz a colori pdf by online you might not require

cycling jersey bike jersey with custom printing in - Jan 14 2023

web order custom cycling jersey only with high quality from custom sg ordering ride now is online even food also can be ordered online and make cycling jersey also can be done

custom bike life ediz a colori 2023 graph safehousetech - Jul 20 2023

web custom bike life ediz a colori 3 3 most unattractive belongings and spaces in an aesthetically pleasing and easy to navigate way glamour 10 books to help you live

custom bike life ediz a colori download only - Apr 05 2022

web custom bike life ediz a colori 3 3 world let the fight begin the home edit john wiley sons adventures of a despatch rider by william henry lowe watson

bike color editor app bmx customizer - Jul 08 2022
web brake cable brake caliper cranks sprocket chain change bike model get more colors choose custom parts finished publish bike most popular bike colors easy to
toutes les manoeuvres de votre voilier en 300 illustrations by - Dec 28 2021
web toutes les manoeuvres de votre voilier navigation voile manoeuvres mers amp bateaux fr toutes les manoeuvres de votre voilier en 300 4 astuces de solitaire pour manuvrer son voilier au port toutes les manoeuvres de votre voilier plaisance diffusion
amazon fr toutes les manoeuvres de votre voilier chevalier - Jul 15 2023
web noté 5 retrouvez toutes les manoeuvres de votre voilier et des millions de livres en stock sur amazon fr achetez neuf ou d occasion
toutes les manoeuvres de votre voilier en 300 illustrations - May 01 2022
web aug 21 2020 la clarté de l explication et des illustrations vous aidera à comprendre les différentes phases d une action que vous ferez naturellement lorsque vous êtes en situation cependant en voilier
livre toutes les manoeuvres de votre voilier en 300 - Mar 31 2022
web découvrez toutes les manoeuvres de votre voilier en 300 illustrations le livre de françois chevalier chez voiles et voiliers sur librest com groupement de librairies indépendantes du grand paris
comprendre toutes les manœuvres de votre voilier en 300 - Mar 11 2023
web sans vouloir détailler les manoeuvres complexes à bord des voiliers de régate l essentiel des situations qui peuvent se présenter est clairement décrit et expliqué la manoeuvre facile en plus de 300 illustrations comment quitter le quai comment envoyer les voiles régler et barrer virer de bord
toutes les manoeuvres de votre voilier en 300 illustrations - Sep 05 2022
web cinquante manoeuvres expliquées pas à pas envoi du spi asymétrique prise de ris évolutions du moteur récupération d un homme à la mer empannage mouillage entre autres avec des conseils et des astuces pour progresser
toutes les manoeuvres de votre voilier en 300 illustrations decitre - Apr 12 2023
web aug 21 2020 toutes les manoeuvres de votre voilier en 300 illustrations grand format françois chevalier note moyenne donner le premier avis extrait comment quitter le quai comment envoyer les voiles régler et barrer virer de bord dès que le voiler largue les amarres les questions fusent et lire la suite 19 50 neuf expédié sous 6 à 12 jours
toutes les manoeuvres de votre voilier en 300 illustrations - Dec 08 2022
web découvrez et achetez toutes les manoeuvres de votre voilier en 300 illustrations par françois chevalier éditeur voiles et voiliers collection comprendre livre neuf année 2020 9782916083964 livraison 24 48h unitheque com librairie franÃ aise

toutes les manoeuvres de votre voilier en 300 illustrations de - Jan 09 2023
web collection voiles voiliers comprendre comment quitter le quai comment envoyer les voiles régler et barrer virer de bord grâce à cet ouvrage partez sereins et réussissez vos plus belles manœuvres un déroulé pour chaque manœuvre la
toutes les manoeuvres de votre voilier en 300 illustrations by - Feb 27 2022
web toutes les manoeuvres de votre voilier en 300 illustrations by françois chevalier ris réduire par enroulement envoyer une voile de brise faire le gros dos la cape récupérer un homme à la mer repêcher le naufrag 7 rentrer au port affaler remorquer accoster au moteur arriver au port à la voile
chevalier comprendre françois manŒuvres de votre voilier furet du - May 13 2023
web chevalier toutes les manŒuvres de votre voilier en 300 illustrations françois chevalier auteur illustrateur toutes les manŒuvres de votre voilier en 300 illustrations comprendre 4 5 sommaire chapitre 1 préparation 1 partie intégrante de la prise en main d un voilier feux de navigation gilets de sauvetage harnais de sécurité
toutes les manoeuvres de votre voilier en 300 illustrations furet du - Nov 07 2022
web aug 21 2020 toutes les manoeuvres de votre voilier en 300 illustrations de plongez vous dans le livre françois chevalier au format grand format ajoutez le à votre liste de souhaits ou abonnez vous à l auteur françois chevalier livraison gratuite à 0 01 dès 35 d achat furet du nord
toutes les manoeuvres de votre voilier en 300 ill pdf origin - Jan 29 2022
web toutes les manoeuvres de votre voilier en 300 amazon fr toutes les manoeuvres de votre voilier en 300 toutes les manoeuvres de votre voilier f chevalier toutes les manoeuvres de votre voilier en 300 ill downloaded from origin locationsciences ai by guest keely burke toutes les manoeuvres de
toutes les manoeuvres de votre voilier en 300 illustrations - Jul 03 2022
web document toutes les manoeuvres de votre voilier en 300 illustrations utiliser les flèches haut et bas du clavier pour vous déplacer dans la liste de suggestions rechercher tapez les premières lettres pour faire apparaître des suggestions et utilisez la tabulation pour naviguer dans la liste de suggestions appuyez sur entrée pour
toutes les manoeuvres de votre voilier en 300 illustrations - Oct 06 2022
web découvrez et achetez le livre toutes les manoeuvres de votre voilier en 300 illustrations écrit par françois chevalier chez voiles et voiliers sur lalibrairie com
toutes les manoeuvres de votre voilier en 300 illustrations - Jun 14 2023
web toutes les manoeuvres de votre voilier en 300 illustrations comprendre chevalier françois amazon com tr kitap
toutes les manœuvres de votre voilier ouest france - Feb 10 2023
web la manœuvre facile en plus de 300 illustrations comment quitter le quai comment envoyer les voiles régler et barrer

virer de bord dès que le voiler largue les amarres les

toutes les manoeuvres de votre voilier en 300 illustrations - Aug 04 2022

web la manoeuvre facile en plus de300 illustrations comment quitter le quai comment envoyer les voiles régler et barrer virer de bord dès que le voilerlargue les amarres les questions fusent et les réponses doivent être claires françois chevalier décortique chaque mouvement à travers un voyage imaginaire où le plaisancier

manoeuvres la voile pour les nuls cours pour apprendre la voile en - Jun 02 2022

web manoeuvres dans cette section nous découvrirons comment manoeuvrer un voilier fini la théorie place à la pratique comment hisser la voile organiser son équipage manoeuvre de l homme à la mer découvrons les chronologies de ces actions en

comprendre toutes les manœuvres de votre voilier en 300 - Aug 16 2023

web la manoeuvre facile en plus de 300 illustrations comment quitter le quai comment envoyer les voiles régler et barrer virer de bord dès que le voilier largue les amarres les questions fusent et les réponses doivent être claires