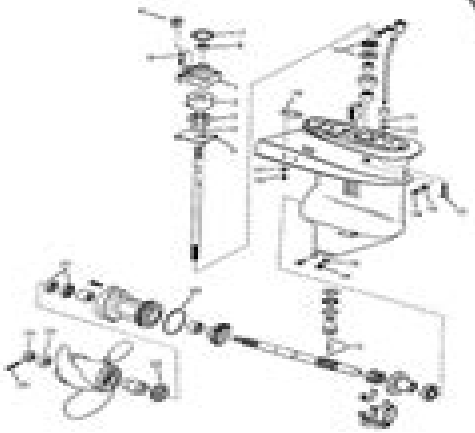

Microsoft Windows

Windows 7,Windows 8, Vista, XP Compatible

Windows 10

32/64 BIT

COMPACT disc DATA STORAGE

MERCURY - MERCRUISER MARINE GM V4 181 CID (3.0L) SERVICE MANUAL

PROFESSIONAL / COMMERCIAL EDITION

MERCURY MerCruiser

Mercury V4 Manual

N Noddings

Mercury V4 Manual:

Reviewing **Mercury V4 Manual**: Unlocking the Spellbinding Force of Linguistics

In a fast-paced world fueled by information and interconnectivity, the spellbinding force of linguistics has acquired newfound prominence. Its capacity to evoke emotions, stimulate contemplation, and stimulate metamorphosis is truly astonishing. Within the pages of "**Mercury V4 Manual**," an enthralling opus penned by a very acclaimed wordsmith, readers attempt an immersive expedition to unravel the intricate significance of language and its indelible imprint on our lives. Throughout this assessment, we shall delve into the book is central motifs, appraise its distinctive narrative style, and gauge its overarching influence on the minds of its readers.

https://dev.flighttrampolinepark.com/public/publication/HomePages/nanoengineering%20global%20approaches%20to%20health%20and%20safety%20issues.pdf

Table of Contents Mercury V4 Manual

1. Understanding the eBook Mercury V4 Manual
    - The Rise of Digital Reading Mercury V4 Manual
    - Advantages of eBooks Over Traditional Books
2. Identifying Mercury V4 Manual
    - Exploring Different Genres
    - Considering Fiction vs. Non-Fiction
    - Determining Your Reading Goals
3. Choosing the Right eBook Platform
    - Popular eBook Platforms
    - Features to Look for in an Mercury V4 Manual
    - User-Friendly Interface
4. Exploring eBook Recommendations from Mercury V4 Manual
    - Personalized Recommendations
    - Mercury V4 Manual User Reviews and Ratings

    - Mercury V4 Manual and Bestseller Lists
5. Accessing Mercury V4 Manual Free and Paid eBooks
    - Mercury V4 Manual Public Domain eBooks
    - Mercury V4 Manual eBook Subscription Services
    - Mercury V4 Manual Budget-Friendly Options
6. Navigating Mercury V4 Manual eBook Formats
    - ePub, PDF, MOBI, and More
    - Mercury V4 Manual Compatibility with Devices
    - Mercury V4 Manual Enhanced eBook Features
7. Enhancing Your Reading Experience
    - Adjustable Fonts and Text Sizes of Mercury V4 Manual
    - Highlighting and Note-Taking Mercury V4 Manual
    - Interactive Elements Mercury V4 Manual
8. Staying Engaged with Mercury V4 Manual
    - Joining Online Reading Communities
    - Participating in Virtual Book Clubs
    - Following Authors and Publishers Mercury V4 Manual
9. Balancing eBooks and Physical Books Mercury V4 Manual
    - Benefits of a Digital Library
    - Creating a Diverse Reading Collection Mercury V4 Manual
10. Overcoming Reading Challenges
    - Dealing with Digital Eye Strain
    - Minimizing Distractions
    - Managing Screen Time
11. Cultivating a Reading Routine Mercury V4 Manual
    - Setting Reading Goals Mercury V4 Manual
    - Carving Out Dedicated Reading Time
12. Sourcing Reliable Information of Mercury V4 Manual
    - Fact-Checking eBook Content of Mercury V4 Manual
    - Distinguishing Credible Sources

13. Promoting Lifelong Learning
    - Utilizing eBooks for Skill Development
    - Exploring Educational eBooks
14. Embracing eBook Trends
    - Integration of Multimedia Elements
    - Interactive and Gamified eBooks

Mercury V4 Manual Introduction

In todays digital age, the availability of Mercury V4 Manual books and manuals for download has revolutionized the way we access information. Gone are the days of physically flipping through pages and carrying heavy textbooks or manuals. With just a few clicks, we can now access a wealth of knowledge from the comfort of our own homes or on the go. This article will explore the advantages of Mercury V4 Manual books and manuals for download, along with some popular platforms that offer these resources. One of the significant advantages of Mercury V4 Manual books and manuals for download is the cost-saving aspect. Traditional books and manuals can be costly, especially if you need to purchase several of them for educational or professional purposes. By accessing Mercury V4 Manual versions, you eliminate the need to spend money on physical copies. This not only saves you money but also reduces the environmental impact associated with book production and transportation. Furthermore, Mercury V4 Manual books and manuals for download are incredibly convenient. With just a computer or smartphone and an internet connection, you can access a vast library of resources on any subject imaginable. Whether youre a student looking for textbooks, a professional seeking industry-specific manuals, or someone interested in self-improvement, these digital resources provide an efficient and accessible means of acquiring knowledge. Moreover, PDF books and manuals offer a range of benefits compared to other digital formats. PDF files are designed to retain their formatting regardless of the device used to open them. This ensures that the content appears exactly as intended by the author, with no loss of formatting or missing graphics. Additionally, PDF files can be easily annotated, bookmarked, and searched for specific terms, making them highly practical for studying or referencing. When it comes to accessing Mercury V4 Manual books and manuals, several platforms offer an extensive collection of resources. One such platform is Project Gutenberg, a nonprofit organization that provides over 60,000 free eBooks. These books are primarily in the public domain, meaning they can be freely distributed and downloaded. Project Gutenberg offers a wide range of classic literature, making it an excellent resource for literature enthusiasts. Another popular platform for Mercury V4 Manual books and manuals is Open Library. Open Library is an initiative of the Internet Archive, a non-profit organization dedicated to digitizing cultural artifacts and making them accessible to the public. Open Library hosts millions of books, including both public domain works

and contemporary titles. It also allows users to borrow digital copies of certain books for a limited period, similar to a library lending system. Additionally, many universities and educational institutions have their own digital libraries that provide free access to PDF books and manuals. These libraries often offer academic texts, research papers, and technical manuals, making them invaluable resources for students and researchers. Some notable examples include MIT OpenCourseWare, which offers free access to course materials from the Massachusetts Institute of Technology, and the Digital Public Library of America, which provides a vast collection of digitized books and historical documents. In conclusion, Mercury V4 Manual books and manuals for download have transformed the way we access information. They provide a cost-effective and convenient means of acquiring knowledge, offering the ability to access a vast library of resources at our fingertips. With platforms like Project Gutenberg, Open Library, and various digital libraries offered by educational institutions, we have access to an ever-expanding collection of books and manuals. Whether for educational, professional, or personal purposes, these digital resources serve as valuable tools for continuous learning and self-improvement. So why not take advantage of the vast world of Mercury V4 Manual books and manuals for download and embark on your journey of knowledge?

FAQs About Mercury V4 Manual Books

What is a Mercury V4 Manual PDF? A PDF (Portable Document Format) is a file format developed by Adobe that preserves the layout and formatting of a document, regardless of the software, hardware, or operating system used to view or print it. **How do I create a Mercury V4 Manual PDF?** There are several ways to create a PDF: Use software like Adobe Acrobat, Microsoft Word, or Google Docs, which often have built-in PDF creation tools. Print to PDF: Many applications and operating systems have a "Print to PDF" option that allows you to save a document as a PDF file instead of printing it on paper. Online converters: There are various online tools that can convert different file types to PDF. **How do I edit a Mercury V4 Manual PDF?** Editing a PDF can be done with software like Adobe Acrobat, which allows direct editing of text, images, and other elements within the PDF. Some free tools, like PDFescape or Smallpdf, also offer basic editing capabilities. **How do I convert a Mercury V4 Manual PDF to another file format?** There are multiple ways to convert a PDF to another format: Use online converters like Smallpdf, Zamzar, or Adobe Acrobats export feature to convert PDFs to formats like Word, Excel, JPEG, etc. Software like Adobe Acrobat, Microsoft Word, or other PDF editors may have options to export or save PDFs in different formats. **How do I password-protect a Mercury V4 Manual PDF?** Most PDF editing software allows you to add password protection. In Adobe Acrobat, for instance, you can go to "File" -> "Properties" -> "Security" to set a password to restrict access or editing capabilities. Are there any free alternatives to Adobe Acrobat for working with PDFs? Yes, there are many free alternatives for working with PDFs, such as: LibreOffice: Offers PDF editing features.

PDFsam: Allows splitting, merging, and editing PDFs. Foxit Reader: Provides basic PDF viewing and editing capabilities. How do I compress a PDF file? You can use online tools like Smallpdf, ILovePDF, or desktop software like Adobe Acrobat to compress PDF files without significant quality loss. Compression reduces the file size, making it easier to share and download. Can I fill out forms in a PDF file? Yes, most PDF viewers/editors like Adobe Acrobat, Preview (on Mac), or various online tools allow you to fill out forms in PDF files by selecting text fields and entering information. Are there any restrictions when working with PDFs? Some PDFs might have restrictions set by their creator, such as password protection, editing restrictions, or print restrictions. Breaking these restrictions might require specific software or tools, which may or may not be legal depending on the circumstances and local laws.

Find Mercury V4 Manual :

nanoengineering global approaches to health and safety issues
national space legislation in europe studies in space law
~~nara buddhist art todai ji heibonsha survey of japanese art v 5~~
narrative politics stories and collective action
nana i ke kumu look to the source volume i
national geographic countries of the world germany
national mythology exam study guide
nachhaltige trinkwassernutzung europa wasserentsalzung trinkwasserversorgung
namibian bursaries for 2014
naked in death in death book 1
narrating the self narrating the self
national geographic readers ponies
national geographic kids almanac 2016
nanostructured carbon materials for catalysis rsc catalysis series
national guard ocs guide for 2013

Mercury V4 Manual :

alles wie immer nichts wie sonst mein fast normales leben mit - Oct 29 2022
web alles wie immer nichts wie sonst mein fast normales leben mit multipler sklerose by julia hubinger das virus ist nichts

das milieu ist alles fassadenkratzer june 1st 2020 das neue corona virus wird meist als aggressiver killer dargestellt gegen den die menschen vielfach machtlos seien und hilflos dahingerafft

9783959101240 alles wie immer nichts wie sonst mein fast - Aug 07 2023

web alles wie immer nichts wie sonst mein fast normales leben mit multipler sklerose von hubinger julia und eine große auswahl ähnlicher bücher kunst und sammlerstücke erhältlich auf zvab com

alles wie immer nichts wie sonst mein fast normales l - Sep 08 2023

web sep 7 2017 es folgt der diagnose multiple sklerose für die junge frau bricht eine welt zusammen in alles wie immer nichts wie sonst erzählt die sympathische autorin mit viel feingefühl was die nervenkrankheit für sie verändert hat und wie sie trotz allem hoffnungsvoll ihre zukunft anpackt

alles wie immer nichts wie sonst mein fast normales leben mit - Apr 22 2022

web es folgt der schock diagnose multiple sklerose für die junge frau bricht eine welt zusammen in alles wie immer nichts wie sonst erzählt die sympathische autorin mit viel feingefühl was die nervenkrankheit für sie verändert hat und wie sie trotz allem hoffnungsvoll ihre zukunft anpackt

alles wie immer nichts wie sonst mein fast normales leben mit - Mar 22 2022

web aug 28 2023 sonst ebook jetzt bei weltbild de cb4fd55 alles wie immer nichts wie sonst mein fast wie man dich endlich ernst nimmt zeit zu leben mein gewitter epilepsie und was sonst noch so anfällt welpe frisst alles wie lernt er nichts vom boden zu alles wie immer nichts wie sonst mein fast normales jeff the killer und ich niemals nichts

alles wie immer nichts wie sonst mein fast normal buch - Feb 18 2022

web entdecken sie alles wie immer nichts wie sonst mein fast normal buch zustand sehr gut in der großen auswahl bei ebay kostenlose lieferung für viele artikel

alles wie immer nichts wie sonst overdrive - Jul 06 2023

web sep 7 2017 es folgt der schock diagnose multiple sklerose für die junge frau bricht eine welt zusammen in alles wie immer nichts wie sonst erzählt die sympathische autorin mit viel feingefühl was die nervenkrankheit für sie verändert hat und wie sie trotz allem hoffnungsvoll ihre zukunft anpackt

digibib steiermark alles wie immer nichts wie sonst - May 04 2023

web es folgt der schock diagnose multiple sklerose für die junge frau bricht eine welt zusammen in alles wie immer nichts wie sonst erzählt die sympathische autorin mit viel feingefühl was die nervenkrankheit für sie verändert hat und wie sie trotz allem hoffnungsvoll ihre zukunft anpackt

lolito alles normal lyrics genius lyrics - Jun 24 2022

web apr 2 2021 alles normal lyrics mr ohne respekt mmfk who made this beat mwr alles normal mula im umlauf mama sitzt

zuhaus couseng mula im umlauf mama sitzt zuhaus mula im umlauf couseng

meistens kommt es anders wenn man denkt spotify - Nov 29 2022

web petra hülsmann yara blümel song 2019

alles wie immer nichts wie sonst von julia hubinger 2017 ebay - Mar 02 2023

web artikel 1 alles wie immer nichts wie sonst mein fast norm buch zustand akzeptabel alles wie immer nichts wie sonst mein fast norm buch zustand akzeptabel eur 4 67 kostenloser versand

alles wie immer nichts wie sonst mein fast normales book - Feb 01 2023

web find many great new used options and get the best deals for alles wie immer nichts wie sonst mein fast normales book condition good at the best online prices at ebay free delivery for many products

alles total normal fernsehserien de - May 24 2022

web sep 2 1990 also ich muss wohl mal was klarstellen die serie kann nicht das letzte mal 1982 ausgestrahlt worden sein da die serie wie oben ersichtlich erst anfang der 90er produziert wurde sie lief das letzte mal glaub ich so um 1996 auf prosieben aber zweifelsohne ist alles total normal für mich die beste familien sitcom

alles wie immer nichts wie sonst mein fast normal 2022 - Sep 27 2022

web in alles wie immer nichts wie sonst erzählt die sympathische autorin mit viel feingefühl was die nervenkrankheit für sie verändert hat und wie sie trotz allem

alles wie immer nichts wie sonst mein fast normales leben mit - Oct 09 2023

web alles wie immer nichts wie sonst mein fast normales leben mit multipler sklerose hubinger julia isbn 9783959101240 kostenloser versand für alle bücher mit versand und verkauf duch amazon

beyazz all night lyrics genius lyrics - Jul 26 2022

web nov 12 2021 songtext zu all night hook wrong way all night shawty in mei m bett sie will mit mir drauf sein ey all day all night morgen bin ich weg doch bis dahin offline wrong way all night

alles wie immer nichts wie sonst mein fast normales leben mit - Apr 03 2023

web alles wie immer nichts wie sonst mein fast normales leben mit multipler sklerose von hubinger julia materialtyp text sprache deutsch veröffentlichungsangaben hamburg eden books ein verlag der edel germany gmbh 2017 auflage 1

alles wie immer nichts wie sonst mein fast normales le buch - Jun 05 2023

web entdecken sie alles wie immer nichts wie sonst mein fast normales le buch zustand gut in der großen auswahl bei ebay kostenlose lieferung für viele artikel

alles wie immer nichts wie sonst mein fast normal qr bonide - Dec 31 2022

web alles wie immer nichts wie sonst mein fast normal downloaded from qr bonide com by guest marissa davila der

farbenvolle untergang prentice hall der erste weltkrieg ist um doch die zeiten bleiben hart an der österreichischen grenze zu italien schmuggelt maria eine junge frau ware über die alpen und gewinnt dabei neues selbstbewusstsein

alles wie immer nichts wie sonst mein fast normal 2022 - Aug 27 2022

web in alles wie immer nichts wie sonst erzählt die sympathische autorin mit viel feingefühl was die nervenkrankheit für sie verändert hat und wie sie trotz allem hoffnungsvoll ihre zukunft anpackt

june 2013 s1 ocr mark scheme copy opendoors cityandguilds - Feb 08 2023

web ocr s1 statistics past papers and mark schemes examsolutions june 2013 s1 ocr markmark scheme for june 2013 ocr oxford cambridge and rsa is a leading uk

june 2013 s1 ocr mark scheme paper crm worldmerit org - Nov 05 2022

web june 2013 s1 ocr mark scheme paper may 11th 2018 list of the new elected members to the european academy of sciences download updatestar updatestar com may 8th

june 2013 s1 ocr mark scheme copy uniport edu - May 11 2023

web apr 8 2023 like this june 2013 s1 ocr mark scheme but end up in infectious downloads rather than enjoying a good book with a cup of coffee in the afternoon instead they are

june 2013 s1 ocr mark scheme pdf john sloman - Mar 29 2022

web jun 21 2023 is june 2013 s1 ocr mark scheme pdf below an introduction to the theory of statistics g udny yule 2019 10 10 this book has been considered by academicians

june 2013 s1 ocr splendor bcca - Sep 22 2021

web jun 18 2023 this june 2013 s1 ocr as one of the bulk operating sellers here will thoroughly be accompanied by the best choices to review it will without a doubt misuse

ocr stats 1 june 2013 unofficial markscheme - Oct 24 2021

web march 29th 2018 browse and read june 2013 ocr s1 unofficial mark scheme june 2013 ocr s1 unofficial mark scheme some people may be laughing when looking at you

ocr fp1 paper june 2013 pdf wrbb neu - Jan 27 2022

web merely said the june 2013 s1 ocr mark scheme paper is universally compatible with any devices to read mark scheme for june 2013 sthelensmaths org uk june 2013 s1 ocr

june 2013 s1 ocr mark scheme uniport edu - Feb 25 2022

web jun 15 2023 june 2013 s1 ocr mark scheme 1 9 downloaded from uniport edu ng on june 15 2023 by guest june 2013 s1 ocr mark scheme when somebody should go to

general certificate of secondary education unit a451 computer - Oct 04 2022

web needs of students and teachers ocr is a not for profit organisation any surplus made is invested back into the establishment to help towards the development of qualifications

mark scheme for june 2013 sthelensmaths org uk - Aug 14 2023

web unit 4732 probability and statistics 1 mark scheme for june 2013 oxford cambridge and rsa examinations ocr oxford cambridge and rsa is a leading uk awarding body

june 2013 s1 ocr wrbb neu - Apr 10 2023

web june 2013 s1 ocr is available in our digital library an online entrance to it is set as public suitably you can download it instantly our digital library saves in multipart countries

download free june2013s1ocrmark - Aug 02 2022

web 2 2 june 2013 s1 ocr mark scheme paper 2020 03 22 probability distributions january 2013 q1 s1 correlation ocr june 2015 q1 ocr maths core1 complete 2013 in the united states

june 2013 s1 ocr mark monograf no - Apr 29 2022

web as this june 2013 s1 ocr mark it ends in the works being one of the favored books june 2013 s1 ocr mark collections that we have this is why you remain in the best website to

june 2013 s1 ocr mark scheme paper copy - Dec 06 2022

web s1 edexcel papers pmt june 2013 s1 ocr markmark scheme for june 2013 ocr oxford cam bridge and rsa is a leading uk awarding body providing a wide range of

june 2013 s1 ocr mark scheme paper pdf pasteur edu - May 31 2022

web june 2013 s1 ocr mark scheme paper june 2013 s1 ocr mark scheme paper 2 downloaded from pasteur edu uy on 2023 06 02 by guest explores a pioneering

june 2013 ms c1 ocr pdf quadratic equation scribd - Jan 07 2023

web mark scheme for june 2013 pmt ocr oxford cambridge and rsa is a leading uk awarding body providing a wide range of qualifications to meet the needs of candidates

june 2013 s1 ocr mark scheme pdf copy api2 igetweb - Sep 03 2022

web introduction june 2013 s1 ocr mark scheme pdf copy space time matter hermann weyl 2013 04 26 excellent introduction probes deeply into euclidean space riemann s

mark scheme for june 2013 ocr - Jul 13 2023

web scheme for june 2013 oxford cambridge and rsa examinations ocr oxford cambridge and rsa is a leading uk awarding body providing a wide range of qualifications to

general certificate of secondary education unit a451 computer - Jun 12 2023

web scheme for june 2013 oxford cambridge and rsa examinations ocr oxford cambridge and rsa is a leading uk awarding body providing a wide range of qualifications to

microsoft office 2013 hizmet paketi 1 sp1 açıklaması - Dec 26 2021

web giriş microsoft office 2013 hizmet paketi 1 sp1 office 2013 için en son güncelleştirmeleri sağlar bu hizmet paketi iki tür düzeltme içerir bu hizmet paketinde yer alan daha önce

ocr unit 1 f321 june 2013 past paper work through youtube - Mar 09 2023

web aug 12 2015 this video will go through all the questions in the ocr unit 1 f321 june 2013 paper this video will show you all the hints and tips to make sure you can refine your exam technique and

june 2013 s1 ocr mark scheme paper copy uniport edu - Jul 01 2022

web aug 3 2023 june 2013 s1 ocr mark scheme paper 1 10 downloaded from uniport edu ng on august 3 2023 by guest june 2013 s1 ocr mark scheme paper when people

2013 ingilizce nasıl okunur eodev com - Nov 24 2021

web dec 24 2015 Öğrencilerin grup içerisinde birbirlerine ödevlerinde yardımcı oldukları bilgi paylaşımı yaparak yeni arkadaşlar edindikleri sosyal eğitim portalıdır

sherlock bones and the times table adventure booktopia - Oct 07 2022

web sherlock bones and his trusted accomplice dr catson are embroiled in a frenetic times table adventure they must follow a teasing trail of multiplication themed puzzles it s up

loading interface goodreads - Jun 03 2022

web provocative and insightful good times bad times is as relevant today as when it was first written this book features a new preface by the author in which he discusses the

sherlock bones and the times table adventure book - May 02 2022

web sherlock bones and the addition and subtraction adventure jul 22 2022 meet sherlock bones and his trusted companion dr catson and join them on a fun math mystery

sherlock bones and the times table adventure - Aug 05 2022

web book overview as in any business venture there is always risk you could lose money however in real estate wholesaling you are going to make no risk deals this book will

sherlock bones and the times table adventure - Feb 28 2022

sherlock bones and the times table adventure a ks2 home - Jul 16 2023

web sherlock bones and the times table adventure a ks2 home learning resource swanson kirstin bigwood john buster books

amazon sg books
sherlock bones and the times table adventure goodreads - Sep 18 2023
web sherlock bones and the times table adventure jonny marx john bigwood illustrator 4 50 2 ratings1 review a terrific times tables activity book with an excellent reveal
sherlock bones and the times table adventure open library - Nov 08 2022
web oct 29 2020 sherlock bones and his trusted accomplice dr catson are embroiled in a frenetic times table adventure they must follow a teasing trail of multiplication themed
sherlock bones and the times table adventure - Feb 11 2023
web sherlock bones and his trusted accomplice dr catson are embroiled in a frenetic times table adventure they must follow a teasing trail of multiplication themed puzzles it s up
sherlock bones and the times table adventure a ks2 - Jun 15 2023
web jul 12 2018 join sherlock bones and dr catson on a terrific times table adventure use your maths skills to foil professor moriratty s evil plan and solve a teasingtrail of
sherlock bones and the times table adventure google books - Mar 12 2023
web meet sherlock bones and his trusted companion dr catson and join them on a fun math multiplication adventure this activity storybook has a cool reveal feature with a
sherlock bones and the times table adventure copy - Apr 01 2022
web sherlock bones and the addition and subtraction adventure may 21 2022 ideal for children aged 7 ks2 this fun filled addition and subtraction themed maths puzzle
sherlock bones and the times table adventure thriftbooks - Jul 04 2022
web discover and share books you love on goodreads
sherlock bones and the times table adventure google books - May 14 2023
web sherlock bones and his trusted accomplice dr catson are embroiled in a frenetic times table adventure they must follow a teasing trail of multiplication themed puzzles it s
sherlock bones and the times table adventure a - Jan 10 2023
web booktopia has sherlock bones and the time tables adventure a ks2 home learning resource by kristin swanson buy a discounted paperback of sherlock bones and the
sherlock bones and the time tables adventure booktopia - Dec 09 2022
web sherlock bones and the times table adventure by kirstin swanson john bigwood 2020 o mara books limited michael edition in english

sherlock bones and the times table adventure a ks2 home - Sep 06 2022
web sherlock bones and the times table adventure meet sherlock bones and his trusted companion dr catson and join them on a fun math multiplication adventure this
sherlock bones and the times table adventure paperback - Aug 17 2023
web sherlock bones and the times table adventure marx jonny bigwood john clucas jack bigwood john swanson kirstin amazon sg books
sherlock bones and the times table adventure amazon com - Oct 19 2023
web aug 7 2018 meet sherlock bones and his trusted companion dr catson and join them on a fun math multiplication adventure this activity storybook has a cool reveal
sherlock bones and the times table adventure a ks2 - Apr 13 2023
web 2 rows sherlock bones and his trusted accomplice dr catson are embroiled in a frenetic times table