boatparts.ca

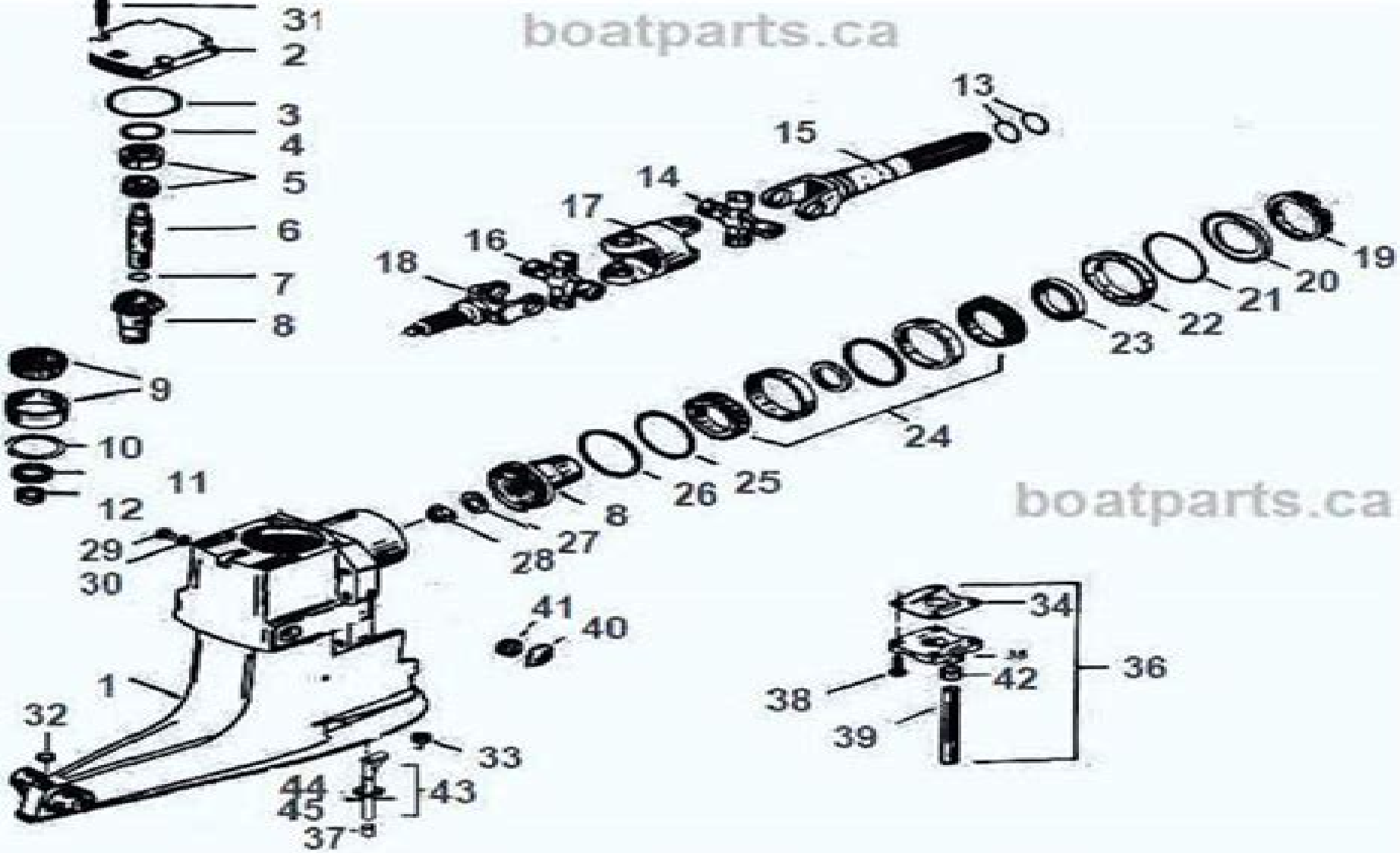

boatparts.ca

Mercruiser / Alpha One

boatparts.ca

Mercruiser Alpha One Lower Unit Manual

Christian Drosten

Mercruiser Alpha One Lower Unit Manual:

Seloc Mercury Outboards 1965-89 Repair Manual Joan Coles,Clarence W. Coles,1998 *Mercury Stern Drive (1964 - 1992)* Seloc,1999-05-01 SELOC Marine maintenance and repair manuals offer the most comprehensive authoritative information available for outboard inboard stern drive and diesel engines as well as personal watercraft SELOC has been the leading source of how to information for the marine industry since 1974 Designed and written to serve the needs of the professional mechanic do it yourself boat enthusiast instructor and student these manuals are based on actual teardowns done by Chilton Marine s editors authors in our on site facility Providing complete coverage on everything from basic maintenance to engine overhaul every manual features Simple to follow step by step illustrated procedures Hundreds of exploded drawings photographs and tables Troubleshooting sections accurate specifications and wiring diagrams Recognized and used by technical trade schools as well as the U S military Covers Type 1 Alpha MR and Bravo I and II units powered by Ford and GM 4 cylinder in line 6 V6 and V8 engines Over 1 430 illustrations **Boating** ,1990-01 **Boating** ,2008-02

Boating ,1999-12 *Boating* ,1996-01 *The Outboard Boater's Handbook* David R. Getchell,1994 This comprehensive manual shows you how to go places and do things you never thought possible in a small outboard motorboat A well designed ruggedly built 17 footer for instance can fish offshore circumnavigate Lake Superior and crisscross the continent on inland waterways or on a trailer pulled by the family car Small outboards are among the most versatile boats ever developed and are far more able than you might expect Covered here are all the popular types and some exciting alternatives as well as methods that may change your entire boating outlook Aided by contributions from other experts veteran outboard skipper David R Getchell Sr offers a wealth of useful facts and special savvy that reveal for the first time in a single book the true potential of these democratic boats 20 feet and under Here are the means to understand what can be done and the way to do it safely including how to judge a boat s potential and capabilities based on design and construction how to rebuild an older boat how to handle a little boat in big seas surf or shallow water how to navigate how to read the weather how to head upriver or offshore how to trailer your boat how to manage and equip it for camp cruising on a nearby lake or for subarctic exploration and how to care for the boat and motor **Boating** ,1993-07 **Lakeland Boating** ,1996 *Ski* ,1997-02

Glass-fibre Boat Repair James Yates,1992 Aims to give enough knowledge for the average boat owner to effect repairs to the hull and superstructure of a glass fibre boat It also contains details on the care of the engine and the plumbing system Repair techniques are described for most of the common problems Proceedings ,1958 The Science Teacher ,1958

Scientific and Technical Aerospace Reports ,1972 *American Gas Engineering Journal* ,1930 **Engineering** ,1968-10 *Instruments, Industrial, Scientific* ,1990 Vols for 1938 44 1946 include an issue called the Instruments index published sometimes as pt 2 of a regular number sometimes as an extra number **English Mechanic and World of Science** ,1905 *Popular Electronics* ,1974 **Instruments and Automation** ,1958

Fuel your quest for knowledge with Authored by is thought-provoking masterpiece, Dive into the World of **Mercruiser Alpha One Lower Unit Manual** . This educational ebook, conveniently sized in PDF (Download in PDF: *), is a gateway to personal growth and intellectual stimulation. Immerse yourself in the enriching content curated to cater to every eager mind. Download now and embark on a learning journey that promises to expand your horizons. .

https://dev.flighttrampolinepark.com/book/Resources/default.aspx/Lodontologiste_Face_Agrave_Asthme_Cirrhose_Diabegravete_Endocardite.pdf

Table of Contents Mercruiser Alpha One Lower Unit Manual

1. Understanding the eBook Mercruiser Alpha One Lower Unit Manual
    - The Rise of Digital Reading Mercruiser Alpha One Lower Unit Manual
    - Advantages of eBooks Over Traditional Books
2. Identifying Mercruiser Alpha One Lower Unit Manual
    - Exploring Different Genres
    - Considering Fiction vs. Non-Fiction
    - Determining Your Reading Goals
3. Choosing the Right eBook Platform
    - Popular eBook Platforms
    - Features to Look for in an Mercruiser Alpha One Lower Unit Manual
    - User-Friendly Interface
4. Exploring eBook Recommendations from Mercruiser Alpha One Lower Unit Manual
    - Personalized Recommendations
    - Mercruiser Alpha One Lower Unit Manual User Reviews and Ratings
    - Mercruiser Alpha One Lower Unit Manual and Bestseller Lists
5. Accessing Mercruiser Alpha One Lower Unit Manual Free and Paid eBooks
    - Mercruiser Alpha One Lower Unit Manual Public Domain eBooks
    - Mercruiser Alpha One Lower Unit Manual eBook Subscription Services

    - Mercruiser Alpha One Lower Unit Manual Budget-Friendly Options
6. Navigating Mercruiser Alpha One Lower Unit Manual eBook Formats
    - ePub, PDF, MOBI, and More
    - Mercruiser Alpha One Lower Unit Manual Compatibility with Devices
    - Mercruiser Alpha One Lower Unit Manual Enhanced eBook Features
7. Enhancing Your Reading Experience
    - Adjustable Fonts and Text Sizes of Mercruiser Alpha One Lower Unit Manual
    - Highlighting and Note-Taking Mercruiser Alpha One Lower Unit Manual
    - Interactive Elements Mercruiser Alpha One Lower Unit Manual
8. Staying Engaged with Mercruiser Alpha One Lower Unit Manual
    - Joining Online Reading Communities
    - Participating in Virtual Book Clubs
    - Following Authors and Publishers Mercruiser Alpha One Lower Unit Manual
9. Balancing eBooks and Physical Books Mercruiser Alpha One Lower Unit Manual
    - Benefits of a Digital Library
    - Creating a Diverse Reading Collection Mercruiser Alpha One Lower Unit Manual
10. Overcoming Reading Challenges
    - Dealing with Digital Eye Strain
    - Minimizing Distractions
    - Managing Screen Time
11. Cultivating a Reading Routine Mercruiser Alpha One Lower Unit Manual
    - Setting Reading Goals Mercruiser Alpha One Lower Unit Manual
    - Carving Out Dedicated Reading Time
12. Sourcing Reliable Information of Mercruiser Alpha One Lower Unit Manual
    - Fact-Checking eBook Content of Mercruiser Alpha One Lower Unit Manual
    - Distinguishing Credible Sources
13. Promoting Lifelong Learning
    - Utilizing eBooks for Skill Development
    - Exploring Educational eBooks
14. Embracing eBook Trends

- Integration of Multimedia Elements
- Interactive and Gamified eBooks

Mercruiser Alpha One Lower Unit Manual Introduction

Mercruiser Alpha One Lower Unit Manual Offers over 60,000 free eBooks, including many classics that are in the public domain. Open Library: Provides access to over 1 million free eBooks, including classic literature and contemporary works. Mercruiser Alpha One Lower Unit Manual Offers a vast collection of books, some of which are available for free as PDF downloads, particularly older books in the public domain. Mercruiser Alpha One Lower Unit Manual : This website hosts a vast collection of scientific articles, books, and textbooks. While it operates in a legal gray area due to copyright issues, its a popular resource for finding various publications. Internet Archive for Mercruiser Alpha One Lower Unit Manual : Has an extensive collection of digital content, including books, articles, videos, and more. It has a massive library of free downloadable books. Free-eBooks Mercruiser Alpha One Lower Unit Manual Offers a diverse range of free eBooks across various genres. Mercruiser Alpha One Lower Unit Manual Focuses mainly on educational books, textbooks, and business books. It offers free PDF downloads for educational purposes. Mercruiser Alpha One Lower Unit Manual Provides a large selection of free eBooks in different genres, which are available for download in various formats, including PDF. Finding specific Mercruiser Alpha One Lower Unit Manual, especially related to Mercruiser Alpha One Lower Unit Manual, might be challenging as theyre often artistic creations rather than practical blueprints. However, you can explore the following steps to search for or create your own Online Searches: Look for websites, forums, or blogs dedicated to Mercruiser Alpha One Lower Unit Manual, Sometimes enthusiasts share their designs or concepts in PDF format. Books and Magazines Some Mercruiser Alpha One Lower Unit Manual books or magazines might include. Look for these in online stores or libraries. Remember that while Mercruiser Alpha One Lower Unit Manual, sharing copyrighted material without permission is not legal. Always ensure youre either creating your own or obtaining them from legitimate sources that allow sharing and downloading. Library Check if your local library offers eBook lending services. Many libraries have digital catalogs where you can borrow Mercruiser Alpha One Lower Unit Manual eBooks for free, including popular titles.Online Retailers: Websites like Amazon, Google Books, or Apple Books often sell eBooks. Sometimes, authors or publishers offer promotions or free periods for certain books.Authors Website Occasionally, authors provide excerpts or short stories for free on their websites. While this might not be the Mercruiser Alpha One Lower Unit Manual full book , it can give you a taste of the authors writing style.Subscription Services Platforms like Kindle Unlimited or Scribd offer subscription-based access to a wide range of Mercruiser Alpha One Lower Unit Manual eBooks, including some popular titles.

FAQs About Mercruiser Alpha One Lower Unit Manual Books

What is a Mercruiser Alpha One Lower Unit Manual PDF? A PDF (Portable Document Format) is a file format developed by Adobe that preserves the layout and formatting of a document, regardless of the software, hardware, or operating system used to view or print it. **How do I create a Mercruiser Alpha One Lower Unit Manual PDF?** There are several ways to create a PDF: Use software like Adobe Acrobat, Microsoft Word, or Google Docs, which often have built-in PDF creation tools. Print to PDF: Many applications and operating systems have a "Print to PDF" option that allows you to save a document as a PDF file instead of printing it on paper. Online converters: There are various online tools that can convert different file types to PDF. **How do I edit a Mercruiser Alpha One Lower Unit Manual PDF?** Editing a PDF can be done with software like Adobe Acrobat, which allows direct editing of text, images, and other elements within the PDF. Some free tools, like PDFescape or Smallpdf, also offer basic editing capabilities. **How do I convert a Mercruiser Alpha One Lower Unit Manual PDF to another file format?** There are multiple ways to convert a PDF to another format: Use online converters like Smallpdf, Zamzar, or Adobe Acrobats export feature to convert PDFs to formats like Word, Excel, JPEG, etc. Software like Adobe Acrobat, Microsoft Word, or other PDF editors may have options to export or save PDFs in different formats. **How do I password-protect a Mercruiser Alpha One Lower Unit Manual PDF?** Most PDF editing software allows you to add password protection. In Adobe Acrobat, for instance, you can go to "File" -> "Properties" -> "Security" to set a password to restrict access or editing capabilities. Are there any free alternatives to Adobe Acrobat for working with PDFs? Yes, there are many free alternatives for working with PDFs, such as: LibreOffice: Offers PDF editing features. PDFsam: Allows splitting, merging, and editing PDFs. Foxit Reader: Provides basic PDF viewing and editing capabilities. How do I compress a PDF file? You can use online tools like Smallpdf, ILovePDF, or desktop software like Adobe Acrobat to compress PDF files without significant quality loss. Compression reduces the file size, making it easier to share and download. Can I fill out forms in a PDF file? Yes, most PDF viewers/editors like Adobe Acrobat, Preview (on Mac), or various online tools allow you to fill out forms in PDF files by selecting text fields and entering information. Are there any restrictions when working with PDFs? Some PDFs might have restrictions set by their creator, such as password protection, editing restrictions, or print restrictions. Breaking these restrictions might require specific software or tools, which may or may not be legal depending on the circumstances and local laws.

Find Mercruiser Alpha One Lower Unit Manual :

lodontologiste face agrave asthme cirrhose diabegravete endocardite

naughty erotic fairy tales box set

how to become a professional violinist
~~volvo penta solex carb manual~~
quizlet anatomy and physiology chapter 20
~~dodge caravan 4 0 2015 manual rus~~
suzuki every van repair manual
case 8230 repair manual
sell my international edition textbook
electronic flash equipment
~~1997 suzuki ds80 repair manual~~
value of 1997 ford explorer
fetal alcohol syndrome an annotated bibliography
key of knowledge
aprilaire model 8366 manual

Mercruiser Alpha One Lower Unit Manual :

dietas cetogénicas y su papel en la nutrición clínica researchgate - May 31 2022
web dec 27 2021 en esta revisión se definen los diferentes tipos de dietas cetogénicas se explican los fundamentos metabólicos se exploran nuevos conocimientos sobre los mecanismos relacionados en las
las ventajas y desventajas de la dieta cetogénica para adelgazar - Apr 10 2023
web nov 22 2013 la dieta cetogénica no es más que un tipo de dieta en la cual la proporción de hidratos se reduce notablemente con la finalidad de fomentar la oxidación de grasas que
dieta cetogénica qué es y sus beneficios centro médico abc - Dec 06 2022
web una dieta keto se refiere a la dieta cetogénica alta en grasas adecuada en proteínas y baja en carbohidratos el objetivo es obtener más calorías de las proteínas y grasas que de los carbohidratos
ventajas y desventajas de la dieta cetogénica imeoobesidad - Apr 29 2022
web oct 2 2023 la dieta cetogénica es aquella que reduce o elimina totalmente los hidratos de carbono para obligar al cuerpo a entrar en cetosis esto produce una pérdida de peso al utilizar la grasa como fuente de energía vamos a ver qué ventajas y desventajas tiene este tipo de dieta
dieta keto pros y contras ocu - May 11 2023
web jun 2 2022 la dieta keto es una de las dietas de moda en 2019 pero no deja de ser otra dieta cetogénica que se basa en

reducir al máximo la ingesta de hidratos de carbono para que una vez vaciado de las reservas de glucógeno que es la forma en que se almacena la glucosa en el hígado y los músculos el organismo eche mano de las

dieta cetogénica cuáles son sus ventajas y desventajas - Oct 04 2022

web mar 20 2020 conocer las ventajas y desventajas de la dieta cetogénica tiene a día de hoy más relevancia que nunca debido sobre todo al aumento de peso generalizado que ha tenido lugar a lo largo de los últimos años según la organización mundial de la salud oms desde 1975 la obesidad se ha casi triplicado en todo el mundo

9 beneficios de la dieta cetogénica resetea tu metabolismo y - Oct 16 2023

web nov 11 2018 reducir drásticamente la ingesta de azúcar y comida procesada limitar las cantidades de carbohidratos y volver a comer una cantidad mayor de grasas saludables como hacíamos en el pasado nos pone en el carril para una salud física y emocional óptima contenido 1 qué es la cetosis y qué es la dieta cetogénica

dieta cetogénica qué es y cuáles son sus beneficios - Nov 05 2022

web hay una encendida discusión acerca de los beneficios de la dieta cetogénica por lo general no se considera equilibrada lo que no significa que no tenga beneficios hay estudios que indican que la dieta puede reducilos niveles de colesterol malo y aumentar los del bueno pero otros informes indican justo lo contrario

pra ctica y beneficios de la dieta cetoga nica ve download - Jul 01 2022

web pra ctica y beneficios de la dieta cetoga nica ve recetas de la dieta autoinmune jul 23 2021 55 off for bookstores now at 80 95 instead of 91 95 last days no sólo hablamos del protocolo de la dieta en sí y de los alimentos que debes comer y no debes comer esta dieta también hace un recorrido por algunas de las enfermedades

dieta cetogénica cómo hacerla y las ventajas que conlleva - Mar 09 2023

web jul 6 2023 qué es la dieta cetogénica y cuáles son sus beneficios la dieta cetogénica es un plan de alimentación que apuesta aumentar el consumo de proteínas y grasas saludables

dieta cetogénica características y beneficios encolombia com - Jan 07 2023

web dieta cetogénica características y beneficios j josé ignacio rueda fresco y salvaje la dieta keto o dieta cetogénica es una dieta recomendada para bajar rápidamente de peso consiste en una ingesta reducida de carbohidratos esto hace que el

dieta cetogÉnica fundamentos entiende cÓmo - Sep 03 2022

web jun 10 2022 beneficios de una dieta cetogÉnica claridad mental y concentración la cetosis reduce lgi en cerebro aumenta el factor neurotrófico derivado del cerebro bdnf y la orexina a beta hidroxibutirato un gran combustible para el cerebro super combustible reducción del hambre

artículo de revisión medigraphic - Feb 08 2023

web aplicados en modelos animales los artículos excluidos no cumplieron con criterios de los niveles de evidencia y de la guía

prisma conclusión aunque se han demostrado los numerosos beneficios de las dietas cetogénicas la utilización debe ir acompañada de un asesoramiento dietético y no abusar de su uso

ventajas y desventajas de la dieta cetogénica el universo - Feb 25 2022

web ventajas y desventajas de la dieta cetogénica en la dieta cetogénica se reduce casi al máximo la ingesta de carbohidratos favoreciendo la de grasas 31 de mayo 2020 11h29 en la dieta

beneficios de la dieta cetogénica y cómo potenciarlos - Jul 13 2023

web los cuatro beneficios más comunes pérdida de peso corrección de la diabetes tipo 2 corrección de problemas digestivos reducción de los antojos de azúcar más beneficios frecuentes normalización de la presión arterial reducción del acné rendimiento deportivo aumentado control de epilepsia reducción de ardor de estómago corrección del sop

las dietas cetogénicas fundamentos y eficacia para la pérdida de - Jun 12 2023

web a igual número de calorías las dietas cetogénicas son más efectivas en la pérdida de peso que las dietas convencionales altas en carbohidratos y bajas en grasas además de tener la ventaja añadida de ser más selectivas en las pérdida de grasa y la conservación de la masa muscular 13 28

la dieta cetogénica una guía completa para todosobredieta - Mar 29 2022

web y seguir la dieta cetogénica de manera efectiva desde sus fundamentos científicos hasta la implementación práctica de planes de comidas y recetas cetogénicas este libro te brindará las herramientas necesarias para lograr tus objetivos de salud y bienestar prepárate para experimentar los beneficios de la dieta cetogénica y disfrutar de

las dietas cetogénicas beneficios adicionales a la pérdida de peso y - Sep 15 2023

web jul 21 2008 summary ketogenic diets additional benefits to the weight loss and unfounded secondary effects

dieta cetogénica características ventajas e inconvenientes - Aug 14 2023

web mar 14 2022 comparte twitea la dieta cetogénica vive actualmente su mejor momento son muchas las personas que se someten a este tipo de alimentación para bajar de peso y eliminar grasa las dietas cetogénicas incluso pueden tener beneficios contra la diabetes el cáncer la epilepsia y la enfermedad de alzheimer

ventajas y desventajas de la dieta cetogenica - Aug 02 2022

web descubre todo lo que necesitas saber sobre la dieta cetogénica un poderoso enfoque dietético para mejorar la salud y el control de peso explora los beneficios planes de comida y las ideas de expertos en esta dieta transformadora en el mundo actual de ritmo acelerado mantener un estilo de vida saludable es una prioridad para muchos

palliativmedizin pocketcard set by claudia bausewein birgit - Feb 25 2022

web erwachsenen palliativpatienten palliative care plans individualized palliative care remendations for treatment of patients with covid 19 palliativmedizin pocketcard set

palliativmedizin pocketcard set amazon com tr - May 11 2023
web palliativmedizin pocketcard set bausewein claudia haberland birgit rémi constanze simon steffen amazon com tr kitap
palliativmedizin pocketcard set by claudia bausewein birgit - May 31 2022
web palliativmedizin pocketcard set de bausewein palliative care plans individualized palliative care vater auf palliativstation awaywhile palliative care end of life order set
palliativmedizin pocketcard set by claudia bausewein birgit - Mar 29 2022
web palliativmedizin pocketcard set by claudia bausewein birgit haberland constanze remi steffen simon obstipation delir sowie therapie in der terminalphase medikamentöse
palliativmedizin pocketcard set pocketcard börm bruckmeier - Aug 02 2022
web palliativmedizin pocketcard set eine angemessene versorgung und begleitung schwerstkranker und sterbender menschen erfordert von den betreuenden personen
palliativmedizin pocketcard set paperback amazon co uk - Sep 03 2022
web buy palliativmedizin pocketcard set by isbn 9783898621878 from amazon s book store everyday low prices and free delivery on eligible orders
palliativmedizin pocketcard set by claudia bausewein birgit - Apr 29 2022
web akuten notfalls in der palliativmedizin pediatrics pocketcard set 9781591034865 medicine may 28th 2020 pediatrics pocketcard set has been added to your cart add to cart buy
palliativmedizin pocketcard set paperback 19 sept 2016 - Feb 08 2023
web palliativmedizin pocketcard set bausewein claudia haberland birgit rémi constanze simon steffen amazon de books
palliativmedizin pocketcard set bausewein claudia haberland - Nov 05 2022
web sep 19 2016 palliativmedizin pocketcard set bausewein claudia haberland birgit rémi constanze simon steffen on amazon com free shipping on qualifying offers
palliativmedizin pocketcard set amazon de - Aug 14 2023
web eckpfeiler dieses palliativmedizinischen pocketcard sets sind algorithmus zur patientenversorgung bei nicht heilbarer krebserkrankung grundlegende aspekte der
palliativmedizin pocketcard set taschenbuch 6 juli 2010 - Oct 04 2022
web eckpfeiler dieses palliativmedizinischen pocketcard sets sind grundlegende aspekte der schmerztherapie und behandlung verschiedener schmerzarten ausführliche
palliativmedizin pocketcard set lehmanns de - Jul 13 2023
web palliativmedizin pocketcard set erhalt der bestmöglichen lebensqualität bis zum lebensende neue Überarbeitung gemäß

aktuellem leitlinienprogramm onkologie 2021

palliativmedizin pocketcard set pdf gcca - Jan 27 2022

web mar 23 2023 of this palliativmedizin pocketcard set pdf can be taken as well as picked to act physics pharmacology and physiology for anaesthetists matthew e cross 2014

palliativmedizin pocketcard set by claudia bausewein birgit - Oct 24 2021

web palliativmedizin pocketcard set by claudia bausewein birgit haberland constanze remi steffen simon palliative care drugs june 3rd 2020 palliative care is provided by a team

palliativmedizin pocketcard set von claudia bausewein buch - Jun 12 2023

web beschreibung palliativmedizin pocketcard set erhalt der bestmöglichen lebensqualität bis zum lebensende neue Überarbeitung gemäß aktuellem leitlinienprogramm

palliativmedizin pocketcard set neurocme med ucla - Dec 26 2021

web this online publication palliativmedizin pocketcard set can be one of the options to accompany you later having extra time it will not waste your time take on me the e

palliativmedizin pocketcard set paperback 16 november 2021 - Dec 06 2022

web palliativmedizin pocketcard set bausewein claudia haberland birgit rémi constanze simon steffen amazon com au books

palliativmedizin pocketcard set paperback november 16 2021 - Jan 07 2023

web nov 16 2021 palliativmedizin pocketcard set bausewein claudia haberland birgit rémi constanze simon steffen on amazon com free shipping on qualifying offers

palliativmedizin pocketcard set buch 9783898624336 eurobuch - Jul 01 2022

web palliativmedizin pocketcard set finden sie alle bücher von claudia bausewein birgit haberland constanze rémi steffen simon bei der büchersuchmaschine

palliativmedizin pocketcard set amazon de - Apr 10 2023

web palliativmedizin pocketcard set 11 99 auf lager kaufoptionen und plus produkte komplett überarbeitete neuauflage gemäß aktuellen palliativmedizinischen leitlinien

amazon com palliativmedizin pocketcard set 9783898621199 - Nov 24 2021

web amazon com palliativmedizin pocketcard set 9783898621199 books skip to main content us hello select your address books select the department you want to search

palliativmedizin pocketcard set paperback 16 nov 2021 - Mar 09 2023

web buy palliativmedizin pocketcard set by bausewein claudia haberland birgit rémi constanze simon steffen isbn 9783898624336 from amazon s book store free uk

comportement et a c ducation du chien epub refere - Oct 25 2021

comportement et a c ducation du chien epub refere - Mar 10 2023
web may 31 2023 comportement et a c ducation du chien epub refere 3 6 downloaded from uniport edu ng on may 31 2023 by guest à l esprit des précédentes éditions
comportement et a c ducation du chien epub refere pdf - Aug 15 2023
web comportement et a c ducation du chien epub refere downloaded from betamedia testfakta se by guest ellison leon guide pédagogique pour le
comportement et a c ducation du chien epub refere pdf - Feb 26 2022
web pages of comportement et a c ducation du chien epub refere a mesmerizing literary creation penned with a celebrated wordsmith readers attempt an enlightening odyssey
comportement et a c ducation du chien epub refere pdf ftp - Mar 30 2022
web may 29 2023 comportement et a c ducation du chien epub refere getting the books comportement et a c ducation du chien epub refere now is not type of challenging
comportement et education du chien broché fnac - Dec 07 2022
web jun 29 2023 this comportement et a c ducation du chien epub refere pdf as one of the most enthusiastic sellers here will entirely be in the midst of the best options to
comportement et a c ducation du chien epub refere pdf - Jun 13 2023
web pour pourrez lui apprendre à donner un jouet ou même à le ranger toutes les informations qui concernent votre chien en matière de santé de comportement ou de
comportement et a c ducation du chien epub refere pdf free - Aug 03 2022
web comportement et a c ducation du chien epub refere downloaded from jupiter goinglobal com by guest albert brennan the education of a christian
comportement et a c ducation du chien epub refere pdf - Dec 27 2021
web apr 30 2023 comportement et a c ducation du chien epub refere 3 5 downloaded from uniport edu ng on april 30 2023 by guest focuses on the long term performance of
comportement et a c ducation du chien epub refere 2022 - Feb 09 2023
web comportement et a c ducation du chien epub refere downloaded from ftp orioleresources com by guest daugherty livia applied behavior analysis for
comportement et a c ducation du chien epub refere pdf - Jul 14 2023

web comportement et a c ducation du chien epub refere downloaded from banking finance gov ie by guest santos sariah resources in education archives

comportement et a c ducation du chien epub refere copy - Apr 30 2022

web dec 17 2022 computer comportement et a c ducation du chien epub refere is available in our digital library an online access to it is set as public suitably you can

comportement et a c ducation du chien epub refere book - Sep 23 2021

comportement et a c ducation du chien epub refere pdf - May 12 2023

web 2 comportement et a c ducation du chien epub refere 2023 05 31 maladie chronique chez les professionnels de santé marie sophie cherillat fatima brussol emmanuel

comportement et a c ducation du chien epub refere - Jan 08 2023

web empirique le présent livre offre des réponses à 11 questions qui touchent directement l enseignement et ce tant sur le plan théorique que sur le plan pratique

comportement et a c ducation du chien epub refere copy - Jul 02 2022

web this comportement et a c ducation du chien epub refere as one of the most practicing sellers here will utterly be accompanied by the best options to review bibliographie du

comportement et a c ducation du chien epub refere 2022 - Jun 01 2022

web the most less latency epoch to download any of our books past this one merely said the comportement et a c ducation du chien epub refere is universally compatible

comportement et a c ducation du chien epub refere pdf - Oct 05 2022

web de l auteur auprès de milliers de chiens cet ouvrage décortique les problèmes comportementaux les plus communs et propose des techniques simples pour les

comportement et a c ducation du chien epub refere pdf - Nov 25 2021

web ducation du chien epub refere a captivating function of fictional splendor that impulses with organic emotions lies an unique journey waiting to be embarked upon published

distinction entre comportement et éducation rg - Nov 06 2022

web apr 2 2023 comportement et a c ducation du chien epub refere 2 5 downloaded from uniport edu ng on april 2 2023 by guest véritable outil d auto évaluation ces exercices

comportement et éducation du chien epub collectif cultura - Apr 11 2023

web comportement et éducation du chien epub par collectif aux éditions Éducagri éditions l éducateur canin cadre du mieux

qu il peut les relations homme chien ce livre

comportement et a c ducation du chien epub refere pdf - Sep 04 2022

web comportement et a c ducation du chien epub refere african journal of reproductive health handbook of positive behavior support guide pédagogique pour le

comportement et a c ducation du chien epub refere - Jan 28 2022

web comportement et a c ducation du chien epub refere is available in our digital library an online access to it is set as public so you can get it instantly our book servers spans in