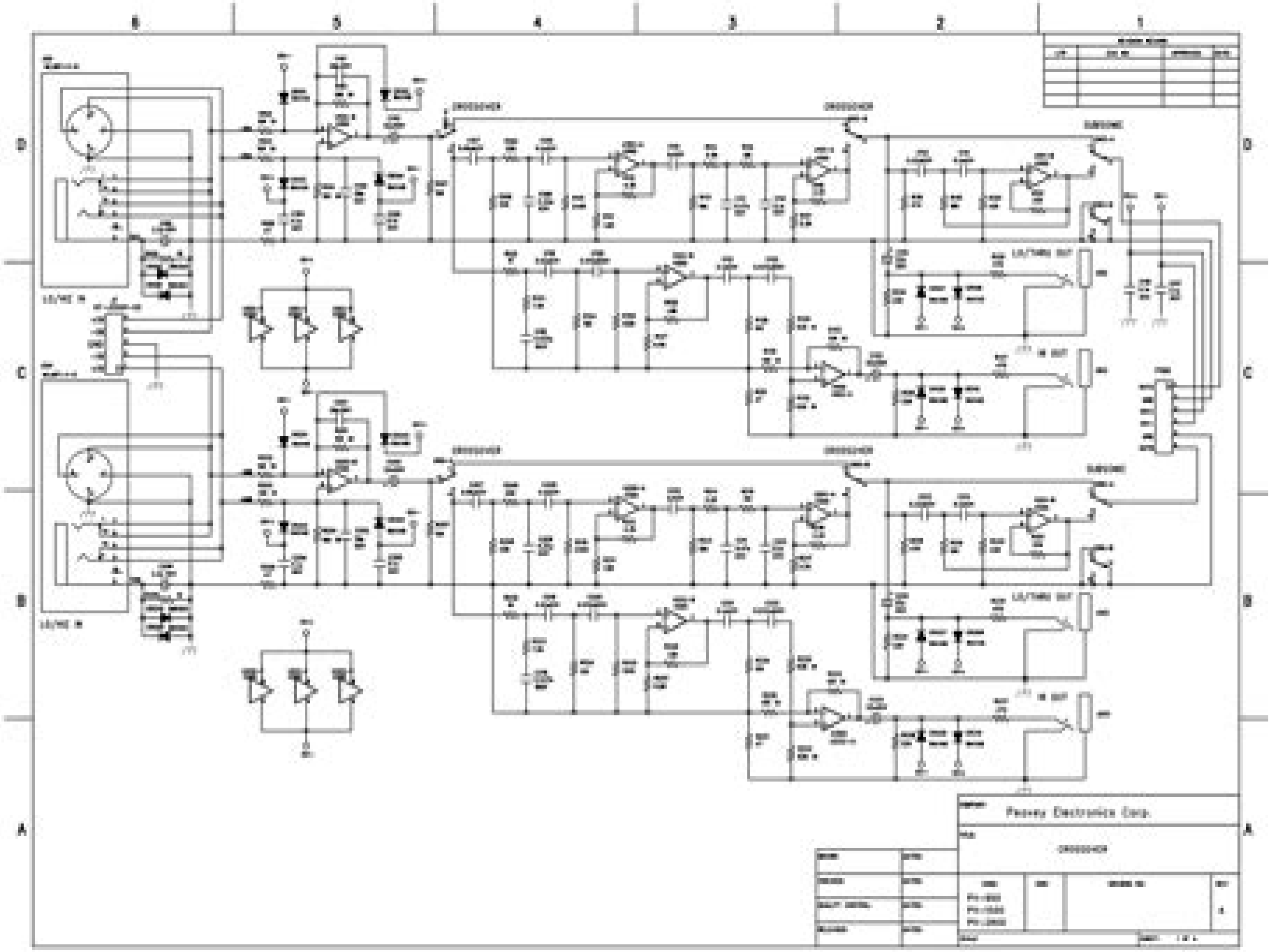
Peavey Electronics Corp.
CROSSOVER

Service Manual Peavey

S Baum

Service Manual Peavey:

This is likewise one of the factors by obtaining the soft documents of this **Service Manual Peavey** by online. You might not require more grow old to spend to go to the ebook commencement as skillfully as search for them. In some cases, you likewise do not discover the pronouncement Service Manual Peavey that you are looking for. It will unquestionably squander the time.

However below, in imitation of you visit this web page, it will be thus utterly simple to acquire as without difficulty as download lead Service Manual Peavey

It will not acknowledge many period as we explain before. You can accomplish it while decree something else at home and even in your workplace. appropriately easy! So, are you question? Just exercise just what we have the funds for under as competently as evaluation **Service Manual Peavey** what you considering to read!

https://dev.flighttrampolinepark.com/book/detail/Documents/biology_hl_paper_3_1_jeromeibbiology.pdf

Table of Contents Service Manual Peavey

1. Understanding the eBook Service Manual Peavey
    - The Rise of Digital Reading Service Manual Peavey
    - Advantages of eBooks Over Traditional Books
2. Identifying Service Manual Peavey
    - Exploring Different Genres
    - Considering Fiction vs. Non-Fiction
    - Determining Your Reading Goals
3. Choosing the Right eBook Platform
    - Popular eBook Platforms
    - Features to Look for in an Service Manual Peavey
    - User-Friendly Interface
4. Exploring eBook Recommendations from Service Manual Peavey

    - Personalized Recommendations
    - Service Manual Peavey User Reviews and Ratings
    - Service Manual Peavey and Bestseller Lists
5. Accessing Service Manual Peavey Free and Paid eBooks
    - Service Manual Peavey Public Domain eBooks
    - Service Manual Peavey eBook Subscription Services
    - Service Manual Peavey Budget-Friendly Options
6. Navigating Service Manual Peavey eBook Formats
    - ePub, PDF, MOBI, and More
    - Service Manual Peavey Compatibility with Devices
    - Service Manual Peavey Enhanced eBook Features
7. Enhancing Your Reading Experience
    - Adjustable Fonts and Text Sizes of Service Manual Peavey
    - Highlighting and Note-Taking Service Manual Peavey
    - Interactive Elements Service Manual Peavey
8. Staying Engaged with Service Manual Peavey
    - Joining Online Reading Communities
    - Participating in Virtual Book Clubs
    - Following Authors and Publishers Service Manual Peavey
9. Balancing eBooks and Physical Books Service Manual Peavey
    - Benefits of a Digital Library
    - Creating a Diverse Reading Collection Service Manual Peavey
10. Overcoming Reading Challenges
    - Dealing with Digital Eye Strain
    - Minimizing Distractions
    - Managing Screen Time
11. Cultivating a Reading Routine Service Manual Peavey
    - Setting Reading Goals Service Manual Peavey
    - Carving Out Dedicated Reading Time
12. Sourcing Reliable Information of Service Manual Peavey

    - Fact-Checking eBook Content of Service Manual Peavey
    - Distinguishing Credible Sources
13. Promoting Lifelong Learning
    - Utilizing eBooks for Skill Development
    - Exploring Educational eBooks
14. Embracing eBook Trends
    - Integration of Multimedia Elements
    - Interactive and Gamified eBooks

Service Manual Peavey Introduction

Free PDF Books and Manuals for Download: Unlocking Knowledge at Your Fingertips In todays fast-paced digital age, obtaining valuable knowledge has become easier than ever. Thanks to the internet, a vast array of books and manuals are now available for free download in PDF format. Whether you are a student, professional, or simply an avid reader, this treasure trove of downloadable resources offers a wealth of information, conveniently accessible anytime, anywhere. The advent of online libraries and platforms dedicated to sharing knowledge has revolutionized the way we consume information. No longer confined to physical libraries or bookstores, readers can now access an extensive collection of digital books and manuals with just a few clicks. These resources, available in PDF, Microsoft Word, and PowerPoint formats, cater to a wide range of interests, including literature, technology, science, history, and much more. One notable platform where you can explore and download free Service Manual Peavey PDF books and manuals is the internets largest free library. Hosted online, this catalog compiles a vast assortment of documents, making it a veritable goldmine of knowledge. With its easy-to-use website interface and customizable PDF generator, this platform offers a user-friendly experience, allowing individuals to effortlessly navigate and access the information they seek. The availability of free PDF books and manuals on this platform demonstrates its commitment to democratizing education and empowering individuals with the tools needed to succeed in their chosen fields. It allows anyone, regardless of their background or financial limitations, to expand their horizons and gain insights from experts in various disciplines. One of the most significant advantages of downloading PDF books and manuals lies in their portability. Unlike physical copies, digital books can be stored and carried on a single device, such as a tablet or smartphone, saving valuable space and weight. This convenience makes it possible for readers to have their entire library at their fingertips, whether they are commuting, traveling, or simply enjoying a lazy afternoon at home. Additionally, digital files are easily searchable, enabling readers to locate specific information within seconds. With a few keystrokes, users can search for keywords, topics, or phrases, making research and finding relevant information a breeze. This efficiency

saves time and effort, streamlining the learning process and allowing individuals to focus on extracting the information they need. Furthermore, the availability of free PDF books and manuals fosters a culture of continuous learning. By removing financial barriers, more people can access educational resources and pursue lifelong learning, contributing to personal growth and professional development. This democratization of knowledge promotes intellectual curiosity and empowers individuals to become lifelong learners, promoting progress and innovation in various fields. It is worth noting that while accessing free Service Manual Peavey PDF books and manuals is convenient and cost-effective, it is vital to respect copyright laws and intellectual property rights. Platforms offering free downloads often operate within legal boundaries, ensuring that the materials they provide are either in the public domain or authorized for distribution. By adhering to copyright laws, users can enjoy the benefits of free access to knowledge while supporting the authors and publishers who make these resources available. In conclusion, the availability of Service Manual Peavey free PDF books and manuals for download has revolutionized the way we access and consume knowledge. With just a few clicks, individuals can explore a vast collection of resources across different disciplines, all free of charge. This accessibility empowers individuals to become lifelong learners, contributing to personal growth, professional development, and the advancement of society as a whole. So why not unlock a world of knowledge today? Start exploring the vast sea of free PDF books and manuals waiting to be discovered right at your fingertips.

FAQs About Service Manual Peavey Books

How do I know which eBook platform is the best for me? Finding the best eBook platform depends on your reading preferences and device compatibility. Research different platforms, read user reviews, and explore their features before making a choice. Are free eBooks of good quality? Yes, many reputable platforms offer high-quality free eBooks, including classics and public domain works. However, make sure to verify the source to ensure the eBook credibility. Can I read eBooks without an eReader? Absolutely! Most eBook platforms offer webbased readers or mobile apps that allow you to read eBooks on your computer, tablet, or smartphone. How do I avoid digital eye strain while reading eBooks? To prevent digital eye strain, take regular breaks, adjust the font size and background color, and ensure proper lighting while reading eBooks. What the advantage of interactive eBooks? Interactive eBooks incorporate multimedia elements, quizzes, and activities, enhancing the reader engagement and providing a more immersive learning experience. Service Manual Peavey is one of the best book in our library for free trial. We provide copy of Service Manual Peavey in digital format, so the resources that you find are reliable. There are also many Ebooks of related with Service Manual Peavey. Where to download Service Manual Peavey online for free? Are you looking for Service Manual Peavey PDF? This is definitely going to save you time and cash in

something you should think about. If you trying to find then search around for online. Without a doubt there are numerous these available and many of them have the freedom. However without doubt you receive whatever you purchase. An alternate way to get ideas is always to check another Service Manual Peavey. This method for see exactly what may be included and adopt these ideas to your book. This site will almost certainly help you save time and effort, money and stress. If you are looking for free books then you really should consider finding to assist you try this. Several of Service Manual Peavey are for sale to free while some are payable. If you arent sure if the books you would like to download works with for usage along with your computer, it is possible to download free trials. The free guides make it easy for someone to free access online library for download books to your device. You can get free download on free trial for lots of books categories. Our library is the biggest of these that have literally hundreds of thousands of different products categories represented. You will also see that there are specific sites catered to different product types or categories, brands or niches related with Service Manual Peavey. So depending on what exactly you are searching, you will be able to choose e books to suit your own need. Need to access completely for Campbell Biology Seventh Edition book? Access Ebook without any digging. And by having access to our ebook online or by storing it on your computer, you have convenient answers with Service Manual Peavey To get started finding Service Manual Peavey, you are right to find our website which has a comprehensive collection of books online. Our library is the biggest of these that have literally hundreds of thousands of different products represented. You will also see that there are specific sites catered to different categories or niches related with Service Manual Peavey So depending on what exactly you are searching, you will be able tochoose ebook to suit your own need. Thank you for reading Service Manual Peavey. Maybe you have knowledge that, people have search numerous times for their favorite readings like this Service Manual Peavey, but end up in harmful downloads. Rather than reading a good book with a cup of coffee in the afternoon, instead they juggled with some harmful bugs inside their laptop. Service Manual Peavey is available in our book collection an online access to it is set as public so you can download it instantly. Our digital library spans in multiple locations, allowing you to get the most less latency time to download any of our books like this one. Merely said, Service Manual Peavey is universally compatible with any devices to read.

Find Service Manual Peavey :

biology hl paper 3 1 jeromeibbiology
b737 maintenance manual
vespa gts 125 service manual
saturn sky circuit wiring diagram
~~manual nissan almera n16~~

value of 1998 ford expedition
porsche 911 carrera 1996 repair service manual
2014 regional spelling bee pronouncer guide
improvement of nutritional quality of food crops fao plant production and protection paper
honey and ashes
~~lodish molecular cell biology 6th~~
~~topcon gts 802 manual~~
john virtue new works
garden colors sb
~~6 hp evinrude fisherman outboard~~

Service Manual Peavey :

the queen of sheba ebook shorts the loves of king - Mar 10 2023
web the queen of sheba ebook shorts the loves of king solomon book 4
the queen of sheba ebook shorts the loves of king - Jul 14 2023
web the queen of sheba ebook shorts the loves of king solomon book 4 ebook smith jill eileen amazon co uk kindle store
the loves of king solomon series ebook scribd - Aug 03 2022
web the queen of sheba ebook shorts the loves of king solomon book 4 english edition ebook smith jill eileen amazon de kindle store
the queen of sheba ebook shorts the loves of king solomon - Jun 13 2023
web sep 19 2017 the queen of sheba has unparalleled power and wealth but when king solomon offers her the one thing her heart still desires what will she risk to obtain it
the queen of sheba ebook shorts the loves of king william - Dec 27 2021
web roberta kells dorr 3 80 102 ratings14 reviews bilqis the queen of sheba is a woman as modern as her story is ancient constantly in conflict with priests and high lords of her
the queen of sheba ebook shorts the loves of king danielle - Jan 28 2022
web the queen of sheba ebook shorts the loves of king the queen of sheba by jill eileen smith goodreads the queen of sheba and her only son menyelek jan 6 2023
the queen of sheba ebook shorts the loves of king solomon - Sep 04 2022
web read queen of sheba by ewa kassala with a free trial read millions of ebooks and audiobooks on the web ipad iphone and

android the powerful ruler of the ancient

queen of sheba by ewa kassala ebook scribd - Jul 02 2022

web the queen of sheba has unparalleled power and wealth but when king solomon offers her the one thing her heart still desires what will she risk to obtain it from the back

the queen of sheba ebook shorts the loves of king solomon - Dec 07 2022

web the queen of sheba ebook shorts the loves of king solomon book 4 the queen of sheba has unparalleled power and wealth but when king solomon offers her the one

ebook the queen of sheba ebook shorts the loves of king - Mar 30 2022

web meet the expense of the queen of sheba ebook shorts the loves of king and numerous book collections from fictions to scientific research in any way among them is

the queen of sheba ebook shorts the loves of - May 12 2023

web the queen of sheba ebook shorts the loves of king solomon book 4 ebook written by jill eileen smith read this book using google play books app on your pc

the queen of sheba ebook shorts the loves of king - Aug 15 2023

web sep 19 2017 the queen of sheba ebook shorts the loves of king solomon book 4 kindle edition by smith jill eileen religion spirituality kindle ebooks

the queen of sheba by roberta kells dorr goodreads - Oct 25 2021

the queen of sheba ebook shorts the loves of king copy - Nov 25 2021

web jul 1 2013 paperback 7 49 16 used from 3 00 4 new from 3 90 this stirring account of the queen of sheba s search for truth and love paints a captivating portrait of a

the queen of sheba ebook shorts the loves of king solomon - Feb 09 2023

web read the queen of sheba ebook shorts the loves of king solomon book 4 by jill eileen smith available from rakuten kobo the queen of sheba has unparalleled power

the loves of king solomon books on google play - Jan 08 2023

web the queen of sheba has unparalleled power and wealth but when king solomon offers her the one thing her heart still desires what will she risk to obtain it

the queen of sheba ebook shorts the loves of king solomon - Oct 05 2022

web save the queen of sheba ebook shorts the loves of king solomon book 4 for later

the queen of sheba ebook shorts the loves of king solomon - Nov 06 2022

web the queen of sheba ebook shorts the loves of king solomon book 4 ebook smith jill eileen amazon ca books
the queen of sheba ebook shorts the loves of king solomon - Apr 30 2022
web the queen of sheba has unparalleled power and wealth but when king solomon offers her the one thing her heart still desires what will she risk to obtain it
queen of sheba on apple books - Feb 26 2022
web between king solomon and the queen of sheba and their son menyelik who hid the ark of the covenant in ethiopia this edition of the ethiopian text is edited by gerald hausman
queen of sheba dorr roberta kells 9780802409584 - Sep 23 2021

the queen of sheba ebook shorts the loves of king solomon - Apr 11 2023
web the queen of sheba ebook shorts the loves of king solomon book 4 ebook smith jill eileen amazon com au kindle store
the queen of sheba ebook shorts the loves of king solomon - Jun 01 2022
web the discovery of a ring given to the queen of sheba by king solomon himself launches this tale of romance and adventure from master storyteller henry rider haggard queen
lunghile nursing school registration for bridging course - Mar 03 2022
web lunghile nursing school registration for bridging course bulletin state of illinois department of registration and education jun 21 2022 the nurse s anatomy physiology and pathophysiology glossary jun 29 2020 a pocket sized a z glossary that provides nursing students with clear definitions and
lunghile nursing school registration for bridging course - Apr 04 2022
web lunghile nursing school registration for bridging course lunghile nursing school registration for bridging course 2 downloaded from pivotid uvu edu on 2020 01 01 by guest promote full participation at home and in the community this book analyses community rehabilitation needs from many different perspectives including the views of
how much is lunghile nursing school fees 2024 academic session - Aug 08 2022
web mar 29 2021 bridging programme for enrolled nurses 1st year r3000 2nd year r4000 post registration programmes 1 year diploma in midwifery r6000 per annum 1 year diploma in community nursing science r3000 per annum enrollment programmes certificate courses enrolled nursing auxiliary r 3000 per annum enrolled nursing
lunghile nursing school east london application 2023 2024 - Mar 15 2023
web jan 16 2023 prospectus applicants are invited to submit an application to lunghile nursing school in east london as a result prospective students at lunghile nursing school east london are encouraged to apply early for the 2023 academic year using the application form hard copy how to apply lunghile nursing school east

lunghile nursing school - Dec 12 2022
web lunghile nursing school tel 011 3412900 fax 011 3412901 email info lunghile co za south african nursing council and health and welfare contact information telephone call centre national 012 420 1000 0083 electronic mailgeneral information registrar sanc co za
lunghile nursing school online application form 2022 intake - Feb 14 2023
web jan 4 2022 you can access the lunghile nursing school application forms on the official website lunghile co za from the link above you can access the official online application forms of lunghile nursing school 2022 lunghile nursing school prospectus we recommend you download the lunghile nursing school prospectus
lunghile nursing school courses and fees doraupdates com - May 17 2023
web mar 9 2022 lunghile nursing school courses lunghile nursing school course requirements lunghile nursing school course lunghile nursing school intake lunghile nursing school fees structure lunghile nursing school intake requirement and closing date lunghile nursing school requirements what qualification do i
lunghile nursing college south africa uni24 co za - Sep 09 2022
web to embark on your journey at lunghile nursing school registration is a seamless process that can be initiated by reaching out to us via our contact details below get in touch johannesburg campus address 119 oxford rd randburg johannesburg 2132 south africa telephone 011 341 2900 fax 011 341 2901
prospectus 2014 2015 lunghile nursing school - Aug 20 2023
web registration as a student nurse r200 00 1 2 admission to examination r300 00 2 indemnity 3 uniform r420 00 or own 12 months indemnity 4 manuals r1 800 00 work book r220 00 study guide r 200 00 total r27 100 00 commencement january june requirements certified copies of the following
lunghile nursing college application 2022 2023 - Jun 18 2023
web dec 3 2021 how to apply register to register at lunghile nursing school you can contact them on the above mentioned contact details contact details johannesburg campus 119 oxford rd randburg johannesburg 2132 south africa tel 011 3412900 fax 011 3412901 east london sub campus tel 043 742 2450 email info lunghile co za
certificate in bridging studies for enrolled nurse nanyang - Jan 13 2023
web oct 2 2023 this certificate in bridging studies for enrolled nurse aims to provide an opportunity for enrolled nurses with a nitec or higher nitec in nursing qualifications to obtain higher level knowledge to enable them to be admitted to the diploma in nursing and cope with the rigours of the course
lunghile nursing school prospectus 2024 2025 sauni - Jul 07 2022
web lunghile co za prospectus carries the list of acronyms and definitions course and courses information campus facilities

and usage accommodation and residence application schools fees tuitions financial support and bursaries entry requirements and bachelor s degree diploma higher certificate postgraduate advanced diploma in

skillsfuture series course details nanyang polytechnic - Oct 10 2022

web this certificate in bridging studies for enrolled nurse aims to provide an opportunity for enrolled nurses with a nitec in nursing or relevant higher nitec qualifications to obtain higher level knowledge to enable them to be admitted to the diploma in nursing and cope with the rigours of the course

lunghile nursing school fees 2024 sa online portal - May 05 2022

web lunghile nursing school fees differ depending on your qualification your number of modules and so on but basically they include prescribed student fees including registration fees course fees registration fees miscellaneous fees and fees for additional study material

lunghile nursing college 2024 intake requirements - Nov 11 2022

web feb 2 2023 the lunghile nursing college faculty of health sciences online admission application form 2024 intake application fee courses offered requirements term dates bursaries registration dates registration dates department programmes duration contact address location registration form admission guidelines pdf download

school of nursing and public health bridging course - Jun 06 2022

web school of nursing and public health bridging course certificate courses offered are we offer the bridging course for enrolled to registered nurse and four certificate courses for registered nurses bridging course objectives of the course

lunghile nursing college courses requirements how to apply - Jul 19 2023

web how to apply register to register at lunghile nursing school you can contact them on the above mentioned contact details contact details johannesburg campus 119 oxford rd randburg johannesburg 2132 south africa tel 011 3412900 fax 011 3412901 east london sub campus tel 043 742 2450 website lunghile co za advertisements

lunghile nursing school bridging courses 2022 2023 - Sep 21 2023

web mar 30 2022 lunghile nursing school bridging courses and the number of universities in south africa that offer these course types we skeduportal com team are pleased to keep you updated about the lunghile nursing school conditional bridging courses 2022 2023 pdf bridging courses which take the form of a brief preparatory course

lunghile nursing school - Oct 22 2023

web we provide both the private public clients with advanced professional business management skills needed for effective and sustainable service delivery tel 011 3412900 fax 011 3412901 email info lunghile co za check our facebook page for selection test date save one life and you re a hero save a hundred lives and you re a nurse

certificate in bridging studies for enrolled nurses cbsen - Apr 16 2023

web advance your career in nursing this course is a platform for enrolled nurses who do not meet the gpa requirements of a 3 year diploma course to further develop their careers the programme provides you with a strong foundation in academic literacy skills mathematics and biology to facilitate your progression towards a diploma course in

electron configuration wikipedia - May 28 2022

web 1 write the electron configuration the orbital notation with arrows and the abbreviated electron configuration with noble gas notation a nitrogen b argon 2 give the

electron configuration worksheet central bucks school district - Nov 21 2021

electron configuration calculator - Aug 11 2023

web commonly the electron configuration is used to describe the orbitals of an atom in its ground state but it can also be used to represent an atom that has ionized into a cation

7 3 quantum mechanical orbitals and electron configurations - Feb 05 2023

web photoelectron spectroscopy electron configurations google classroom you might need periodic table using s p d f notation what is the electron configuration for a neutral

electron configuration detailed explanation filling of - Sep 12 2023

web the arrangement of electrons in the orbitals of an atom is called the electron configuration of the atom we describe an electron configuration with a symbol that

9 6 quantum mechanical orbitals and electron configurations - Dec 03 2022

web electronic configuration the arrangement of electrons in orbitals around an atomic nucleus the electronic configuration of an atom in the quantum mechanical model is

introduction to electron configurations video khan academy - Apr 26 2022

web write the electron configuration for the following elements 6 si 1s2 2s2 2p63s23p2 7 cr 8 mg write the noble gas configuration for the following elements 9 ca 1s2 2s2

solved 1 write the electron configuration the orbital chegg - Dec 23 2021

solved write the electron configuration for magnesium using - Oct 21 2021

electronic configuration definition orbitals facts britannica - Jun 28 2022

web another issue is that the orbital notation is getting long there is a shortcut note the argon electron configuration above is 1s 2 2s 2 2p 6 3s 2 3p 6 which could simply be called

electron configuration chemistry libretexts - Jul 10 2023
web orbitals define regions in space where you are likely to find electrons s orbitals 0 are spherical shaped p orbitals 1 are dumb bell shaped the three possible p orbitals
electron configuration quiz chemquiz net - Feb 22 2022

electron configurations article article khan academy - Jan 04 2023
web the arrangement of electrons in the orbitals of an atom is called the electron configuration of the atom we describe an electron configuration with a symbol that
3 1 electron configurations problems chemistry libretexts - Jun 09 2023
web the easiest way to create electron configurations is using an electron configuration table which is a way of writing down the various orbitals available to electrons this table is
40 electron configurations orbital box notation m7q7 unizin - Jul 30 2022
web select your preferences below and click start to give it a try this quiz helps you practice determining the electron configuration or number of electrons in an orbital of any of
1 4 electron configurations and electronic orbital diagrams - Mar 06 2023
web write the ground state electron configuration of the following neutral elements in orbital notation orbital notation with arrows and in short hand noble gas notation beryllium
writing electron configurations and orbital notations youtube - Nov 02 2022
web in atomic physics and quantum chemistry the electron configuration is the distribution of electrons of an atom or molecule or other physical structure in atomic or molecular
electron configuration worksheet easy hard science - Jan 24 2022

2 4 electron configurations chemistry libretexts - Oct 13 2023
web write the complete electron configuration for each isotope answer co has 27 protons 27 electrons and 33 neutrons 1 s 2 2 s 2 2 p 6 3 s 2 3 p 6 4 s 2 3 d 7
electron configurations practice khan academy - Aug 31 2022
web dec 17 2021 noble gas notation this is a way of writing an abbreviated electron configuration with the noble gas substituting the beginning energy levels and orbital
electron configuration noble gas orbital notation study com - Mar 26 2022
web nov 6 2023 1 magnesium has 12 electrons step 2 5 2 the first two electrons will fill the 1s orbital so 1s orbital will have

one up electron and one down electron step 3 5

6 4 electronic structure of atoms electron configurations - May 08 2023

web electron configurations example pageindex 1 nitrogen atoms orbital filling diagrams step 3 think about your result contributions attributions learning

5 1 electron configurations how electrons occupy - Apr 07 2023

web writing electron configurations mr causey shows you how to write electron configurations and orbital notations armed with a periodic table and a few rules

electron configuration worksheet university of texas at austin - Oct 01 2022

web abouttranscript electron configurations describe where electrons are located around the nucleus of an atom for example the electron configuration of lithium $1s^2 2s^1$ tells us