Specifications

Alternator

Bosch Alternator Coverage Chart			
Caterpillar Part Number	Model Number	Voltage	Amperage
8C5535	K1	12	32
7T2876	K1	12	55
3E7295	K1	12	55
9X0341	K1	12	90
9W3043	N1	24	52
2Y4212	K1	24	17
2Y8310	K1	24	21

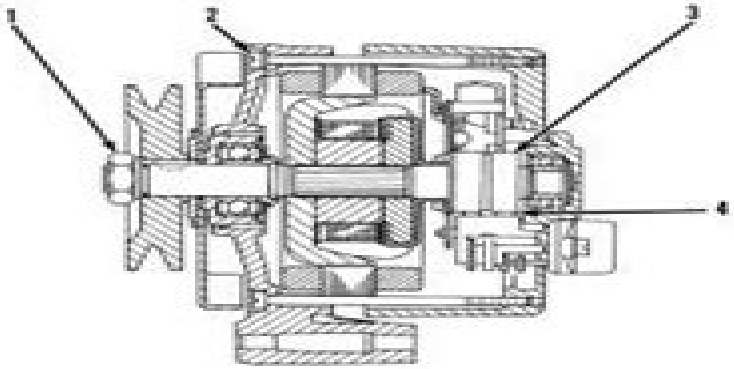

8C5535, 7T2876, 2Y4212 And 2Y8310 Alternators Sectional View

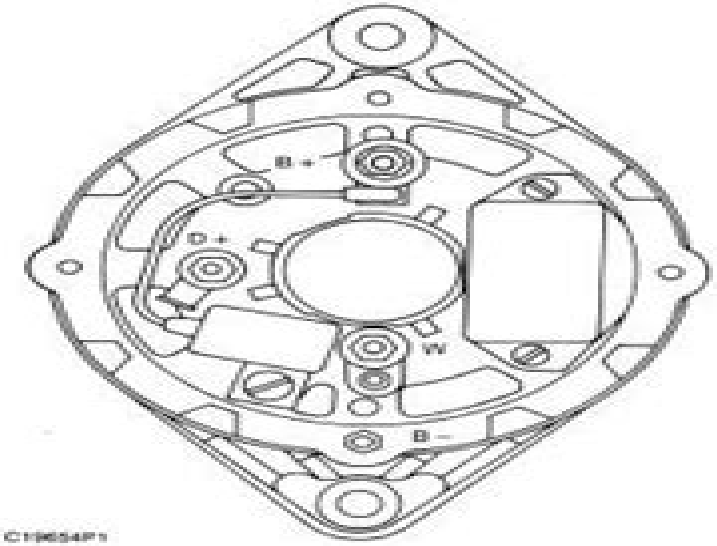

8C5535, 7T2876, 2Y4212 And 2Y8310 Alternators End View

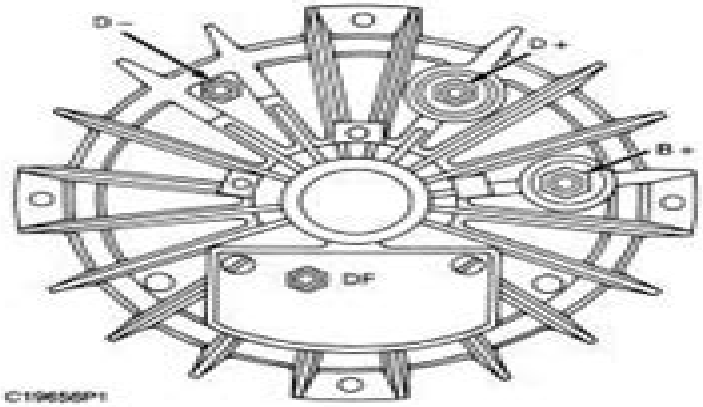

8C5535, 7T2876, 2Y4212 And 2Y8310 Alternators Enclosed End View

www.epcatalogs.com

Bosch Alternator Service Manual

M Tight

Bosch Alternator Service Manual:

Motor Auto Repair Manual ,1979 Motor Auto Repair Manual, 1982-1988 Motor,1987 This latest edition of the bestselling Auto Repair Manual covers more than 1 900 models of domestic cars from 1982 1988 and includes more than 55 000 essential service specifications and repair facts as well as 2 500 diagrams cutaways and quick check spec charts Illustrated Light Utility Tractor Service Manual ,1975 **Volkswagen Rabbit, Scirocco Service Manual, 1975/1976/1977/1978/1979 Gasoline Models** ,1982 *Chilton's Chrysler/Dodge/Plymouth Repair Manual, 1981-88* ,1989 These manuals provide comprehensive repair and maintenance information on all makes and model years as indicated for each manufacturer For consumers who stick to one make of car this series will provide multi vehicle information For retailers with limited shelf space this series provides model specific coverage in only five volumes **Chilton's Auto Repair Manual 1981-1988** Chilton Automotive Books,1988 The auto repair manual that do it yourselfers have relied on to save money now covers 1981 88 domestic cars This updated edition covers Detroit s newest models including the new Chrysler TC Chevrolet Corsica and Pontiac LeMans The most asked for book of its kind More than 3 000 illustrations

Chilton's Auto Repair Manual, 1988-1992 Jeff S. Chilton,Chilton Book Company,1991 Information on repair replacement and adjustment for major components of American cars mass produced between 1988 and 1992 **Chilton's Auto Repair Manual 1986** Chilton Book Company,1985 **Chilton's Auto Repair Manual, 1983** Chilton Automotive Books,1982 Guide to maintenance and repair of every mass produced American car made between 1976 and 1983 **Chilton's Auto Repair Manual 1982** Alan F. Turner,1981 *Volvo 240 Service Manual 1983 Through 1993* Bentley Publishers,1993 Vehicle Maintenance Volkswagen Rabbit/Jetta Diesel Service Manual, Including Pickup Truck and Turbo-diesel, 1977, 1978, 1979, 1980, 1981, 1982, 1983, 1984 Robert Bentley, inc,1984 Everything you need to troubleshoot service repair the diesel engine its direct cylinder fuel injection system This manual is just as thorough as our other two Rabbit Jetta Scirocco Pickup Truck service manuals but focuses exclusively on diesel models We eliminated information covering the gasoline engine fuel injection other subjects that don t apply to diesel engine models Removing this potentially confusing material allows us to cover particular features of the diesel models in greater depth You ll find testing troubleshooting repair steps for everything from diesel fuel injection adjustment to the oil cooler used on models with automatic transmission or Turbo Diesel engines Chilton's Repair Manual Chilton Book Company. Automobile Editorial Department,1989 **Volkswagen GTI Golf-Jetta Service Manual, 1985-1992** Robert Bentley, inc,1992 New information covers the 2 0 liter 16V engine ABS troubleshooting service CIS E Motronic fuel injection Digifant I fuel injection with On Board Diagnosis ECO Diesel full manual transaxle rebuilding procedures A special Fundamentals section has been added to the beginning of the manual to help the owner understand the basics of automotive systems repair procedures The most comprehensive Golf manual available *Chilton's Auto Repair Manual* ,1993 Each edition includes information for that year and several previous years

Chilton's Repair Manual Richard J. Rivele,1991 **Saab 900, 16 Valve Official Service Manual, 1985-1993** Bentley,Bentley Publishers,1993 These official Saab manuals are the only factory authorized comprehensive single source of service information and specifications available Whether you re a professional technician or a do it yourselfer these manuals will help you understand care for and repair your Saab Everything from fundamental automotive concepts and maintenance procedures to complex electrical system troubleshooting and complete engine overhaul is clearly explained Critical updates and information from the Saab Service Information Manual the Parts Service Information System and Saab Service Training have been included as well as fast proven repair procedures and tips used by Saab technicians *Chilton Auto Repair Manual, 1980* Chilton Automotive Editorial Staff,Chilton Book Company,1979 *Glenn's Foreign Car Repair Manual* Harold T. Glenn,1963 Haynes Chrysler Mid-Size Cars Owners Workshop Manual, 1982-1989 Larry Warren,John Harold Haynes,1991

Adopting the Song of Expression: An Psychological Symphony within **Bosch Alternator Service Manual**

In a world consumed by monitors and the ceaseless chatter of quick transmission, the melodic splendor and psychological symphony created by the written term frequently diminish into the backdrop, eclipsed by the constant noise and disruptions that permeate our lives. However, set within the pages of **Bosch Alternator Service Manual** an enchanting fictional prize brimming with fresh emotions, lies an immersive symphony waiting to be embraced. Crafted by a wonderful musician of language, this charming masterpiece conducts viewers on an emotional trip, skillfully unraveling the concealed tunes and profound influence resonating within each carefully crafted phrase. Within the depths with this touching examination, we can investigate the book is central harmonies, analyze their enthralling publishing model, and submit ourselves to the profound resonance that echoes in the depths of readers souls.

https://dev.flighttrampolinepark.com/public/scholarship/Documents/Section%202us%20History%20Study%20Guide%20Answers.pdf

Table of Contents Bosch Alternator Service Manual

1. Understanding the eBook Bosch Alternator Service Manual
    - The Rise of Digital Reading Bosch Alternator Service Manual
    - Advantages of eBooks Over Traditional Books
2. Identifying Bosch Alternator Service Manual
    - Exploring Different Genres
    - Considering Fiction vs. Non-Fiction
    - Determining Your Reading Goals
3. Choosing the Right eBook Platform
    - Popular eBook Platforms
    - Features to Look for in an Bosch Alternator Service Manual
    - User-Friendly Interface
4. Exploring eBook Recommendations from Bosch Alternator Service Manual

    - Personalized Recommendations
    - Bosch Alternator Service Manual User Reviews and Ratings
    - Bosch Alternator Service Manual and Bestseller Lists
5. Accessing Bosch Alternator Service Manual Free and Paid eBooks
    - Bosch Alternator Service Manual Public Domain eBooks
    - Bosch Alternator Service Manual eBook Subscription Services
    - Bosch Alternator Service Manual Budget-Friendly Options
6. Navigating Bosch Alternator Service Manual eBook Formats
    - ePub, PDF, MOBI, and More
    - Bosch Alternator Service Manual Compatibility with Devices
    - Bosch Alternator Service Manual Enhanced eBook Features
7. Enhancing Your Reading Experience
    - Adjustable Fonts and Text Sizes of Bosch Alternator Service Manual
    - Highlighting and Note-Taking Bosch Alternator Service Manual
    - Interactive Elements Bosch Alternator Service Manual
8. Staying Engaged with Bosch Alternator Service Manual
    - Joining Online Reading Communities
    - Participating in Virtual Book Clubs
    - Following Authors and Publishers Bosch Alternator Service Manual
9. Balancing eBooks and Physical Books Bosch Alternator Service Manual
    - Benefits of a Digital Library
    - Creating a Diverse Reading Collection Bosch Alternator Service Manual
10. Overcoming Reading Challenges
    - Dealing with Digital Eye Strain
    - Minimizing Distractions
    - Managing Screen Time
11. Cultivating a Reading Routine Bosch Alternator Service Manual
    - Setting Reading Goals Bosch Alternator Service Manual
    - Carving Out Dedicated Reading Time
12. Sourcing Reliable Information of Bosch Alternator Service Manual

    - Fact-Checking eBook Content of Bosch Alternator Service Manual
    - Distinguishing Credible Sources
13. Promoting Lifelong Learning
    - Utilizing eBooks for Skill Development
    - Exploring Educational eBooks
14. Embracing eBook Trends
    - Integration of Multimedia Elements
    - Interactive and Gamified eBooks

Bosch Alternator Service Manual Introduction

Bosch Alternator Service Manual Offers over 60,000 free eBooks, including many classics that are in the public domain. Open Library: Provides access to over 1 million free eBooks, including classic literature and contemporary works. Bosch Alternator Service Manual Offers a vast collection of books, some of which are available for free as PDF downloads, particularly older books in the public domain. Bosch Alternator Service Manual : This website hosts a vast collection of scientific articles, books, and textbooks. While it operates in a legal gray area due to copyright issues, its a popular resource for finding various publications. Internet Archive for Bosch Alternator Service Manual : Has an extensive collection of digital content, including books, articles, videos, and more. It has a massive library of free downloadable books. Free-eBooks Bosch Alternator Service Manual Offers a diverse range of free eBooks across various genres. Bosch Alternator Service Manual Focuses mainly on educational books, textbooks, and business books. It offers free PDF downloads for educational purposes. Bosch Alternator Service Manual Provides a large selection of free eBooks in different genres, which are available for download in various formats, including PDF. Finding specific Bosch Alternator Service Manual, especially related to Bosch Alternator Service Manual, might be challenging as theyre often artistic creations rather than practical blueprints. However, you can explore the following steps to search for or create your own Online Searches: Look for websites, forums, or blogs dedicated to Bosch Alternator Service Manual, Sometimes enthusiasts share their designs or concepts in PDF format. Books and Magazines Some Bosch Alternator Service Manual books or magazines might include. Look for these in online stores or libraries. Remember that while Bosch Alternator Service Manual, sharing copyrighted material without permission is not legal. Always ensure youre either creating your own or obtaining them from legitimate sources that allow sharing and downloading. Library Check if your local library offers eBook lending services. Many libraries have digital catalogs where you can borrow Bosch Alternator Service Manual eBooks for free, including popular titles.Online Retailers: Websites like Amazon, Google Books, or Apple Books often sell eBooks. Sometimes, authors or publishers offer promotions or free periods for certain

books.Authors Website Occasionally, authors provide excerpts or short stories for free on their websites. While this might not be the Bosch Alternator Service Manual full book , it can give you a taste of the authors writing style.Subscription Services Platforms like Kindle Unlimited or Scribd offer subscription-based access to a wide range of Bosch Alternator Service Manual eBooks, including some popular titles.

FAQs About Bosch Alternator Service Manual Books

How do I know which eBook platform is the best for me? Finding the best eBook platform depends on your reading preferences and device compatibility. Research different platforms, read user reviews, and explore their features before making a choice. Are free eBooks of good quality? Yes, many reputable platforms offer high-quality free eBooks, including classics and public domain works. However, make sure to verify the source to ensure the eBook credibility. Can I read eBooks without an eReader? Absolutely! Most eBook platforms offer webbased readers or mobile apps that allow you to read eBooks on your computer, tablet, or smartphone. How do I avoid digital eye strain while reading eBooks? To prevent digital eye strain, take regular breaks, adjust the font size and background color, and ensure proper lighting while reading eBooks. What the advantage of interactive eBooks? Interactive eBooks incorporate multimedia elements, quizzes, and activities, enhancing the reader engagement and providing a more immersive learning experience. Bosch Alternator Service Manual is one of the best book in our library for free trial. We provide copy of Bosch Alternator Service Manual in digital format, so the resources that you find are reliable. There are also many Ebooks of related with Bosch Alternator Service Manual. Where to download Bosch Alternator Service Manual online for free? Are you looking for Bosch Alternator Service Manual PDF? This is definitely going to save you time and cash in something you should think about. If you trying to find then search around for online. Without a doubt there are numerous these available and many of them have the freedom. However without doubt you receive whatever you purchase. An alternate way to get ideas is always to check another Bosch Alternator Service Manual. This method for see exactly what may be included and adopt these ideas to your book. This site will almost certainly help you save time and effort, money and stress. If you are looking for free books then you really should consider finding to assist you try this. Several of Bosch Alternator Service Manual are for sale to free while some are payable. If you arent sure if the books you would like to download works with for usage along with your computer, it is possible to download free trials. The free guides make it easy for someone to free access online library for download books to your device. You can get free download on free trial for lots of books categories. Our library is the biggest of these that have literally hundreds of thousands of different products categories represented. You will also see that there are specific sites catered to different product types or categories, brands or niches related with Bosch Alternator Service Manual. So depending on what exactly you are searching,

you will be able to choose e books to suit your own need. Need to access completely for Campbell Biology Seventh Edition book? Access Ebook without any digging. And by having access to our ebook online or by storing it on your computer, you have convenient answers with Bosch Alternator Service Manual To get started finding Bosch Alternator Service Manual, you are right to find our website which has a comprehensive collection of books online. Our library is the biggest of these that have literally hundreds of thousands of different products represented. You will also see that there are specific sites catered to different categories or niches related with Bosch Alternator Service Manual So depending on what exactly you are searching, you will be able tochoose ebook to suit your own need. Thank you for reading Bosch Alternator Service Manual. Maybe you have knowledge that, people have search numerous times for their favorite readings like this Bosch Alternator Service Manual, but end up in harmful downloads. Rather than reading a good book with a cup of coffee in the afternoon, instead they juggled with some harmful bugs inside their laptop. Bosch Alternator Service Manual is available in our book collection an online access to it is set as public so you can download it instantly. Our digital library spans in multiple locations, allowing you to get the most less latency time to download any of our books like this one. Merely said, Bosch Alternator Service Manual is universally compatible with any devices to read.

Find Bosch Alternator Service Manual :

section 2us history study guide answers
~~359 peterbilt wiring schematic~~
be my guest by conrad n hilton
~~2002 holden rodeo service manual~~
2014 retail calender
workshop manual for suzuki liana
upng 1st semester
bus driver vacancies at medunsa
1982 honda rebel 250 owner manual
zenith zp505 universal remote control manual
yamaha chappy lb2 lb2m service repair manual
business studies study guide grade 11
~~non renewable energy interpreting graphics holt environmental~~
the diary of anne frank kesselman acting edition paperback
~~dodge caravan car service repair manual 2001 2002 2003 2004 2005 2006 2007~~

Bosch Alternator Service Manual :

gli eserciti delle guerre napoleoniche - Dec 07 2022
web guerre napoleoniche è il termine usato per definire l insieme delle guerre combattute in europa nel periodo in cui napoleone bonaparte governò la francia in parte estensione
amazon it gli eserciti delle guerre napoleoniche - Nov 25 2021

gli eserciti delle guerre napoleoniche l armadillo editore - Sep 04 2022
web descrizione per quasi due decenni le guerre napoleoniche insanguinarono l occidente dai ghiacci della russia alle aride terre della penisola iberica dall egitto a waterloo in
gli eserciti delle guerre napoleoniche by chris mcnab goodreads - Mar 30 2022
web descrizione recensioni 0 chris mcnab per quasi due decenni le guerre napoleoniche insanguinarono l occidente dai ghiacci della russia alle aride terre della penisola
gli eserciti delle guerre napoleoniche kağıt kapak amazon com tr - Jun 13 2023
web gli eserciti delle guerre napoleoniche mcnab chris amazon com tr kitap Çerez tercihlerinizi seçin Çerez bildirimimizde ayrıntılı şekilde açıklandığı üzere alışveriş
gli eserciti delle guerre napoleoniche copertina flessibile - May 12 2023
web questo libro si propone come guida per conoscere sia gli eserciti dei paesi che furono i principali protagonisti delle campagne napoleoniche francia gran bretagna austria
gli eserciti delle guerre napoleoniche l armadillo editore - Jul 02 2022
web questo libro si propone come guida per conoscere sia gli eserciti dei paesi che furono i principali protagonisti delle campagne napoleoniche francia gran bretagna austria
guerre napoleoniche wikipedia - Nov 06 2022
web gli eserciti antichi la f costituì il nerbo degli antichi eserciti greci ellenistici e romani nei quali la cavalleria ebbe sempre funzioni ausiliarie le f greche nacquero e si
gli eserciti delle guerre napoleoniche chris mcnab libro leg - Apr 11 2023
web questo libro si propone come guida per conoscere sia gli eserciti dei paesi che furono i principali protagonisti delle campagne napoleoniche francia gran bretagna austria
gli eserciti delle guerre napoleoniche la storia militare - Feb 26 2022
web tutti gli eserciti dell epoca delle guerre napoleoniche adottavano la forma più matura della tattica lineare o meglio il

sistema di tattiche imposto con le sue vittorie dal re di

le guerre napoleoniche in storia della civiltà europea a cura di - Apr 30 2022

web read reviews from the world s largest community for readers per quasi due decenni le guerre napoleoniche insanguinarono l occidente dai ghiacci della rus

gli eserciti delle guerre napoleoniche chris mcnab libro leg - Aug 03 2022

web gli eserciti delle guerre napoleoniche 37 00

gli eserciti delle guerre napoleoniche chris mcnab libro leg - Jul 14 2023

web gli eserciti delle guerre napoleoniche è un libro di chris mcnab pubblicato da leg edizioni nella collana biblioteca di arte militare acquista su ibs a 30 40

gli eserciti delle guerre napoleoniche copertina flessibile - Sep 16 2023

web sostanzialmente é una descrizione di tutti gli eserciti che hanno combattuto in quel periodo ovviamente il grado di approfondimento dipende dall impegno militare affrontato dall esercito in questione che affronta aspetti come le tattiche usate l organizzazione

tattiche la tattica napoleonica warfare - Jan 28 2022

web questo libro si propone come guida per conoscere sia gli eserciti dei paesi che furono i principali protagonisti delle campagne napoleoniche francia gran bretagna austria

gli eserciti delle guerre napoleoniche amazon it - Aug 15 2023

web questo libro si propone come guida per conoscere sia gli eserciti dei paesi che furono i principali protagonisti delle campagne napoleoniche francia gran bretagna austria

gli eserciti delle guerre napoleoniche hoepli it - Dec 27 2021

web compra gli eserciti delle guerre napoleoniche spedizione gratuita su ordini idonei

gli eserciti delle guerre napoleoniche chris mcnab libro - Feb 09 2023

web questo libro si propone come guida per conoscere sia gli eserciti dei paesi che furono i principali protagonisti delle campagne napoleoniche francia gran bretagna austria

gli eserciti delle guerre napoleoniche libreria universitaria - Jan 08 2023

web gli eserciti delle guerre napoleoniche libro di chris mcnab spedizione gratuita per ordini superiori a 25 euro acquistalo su libreriauniversitaria it pubblicato da leg

gli eserciti delle guerre napoleoniche chris mcnab lafeltrinelli - Mar 10 2023

web gli eserciti delle guerre napoleoniche è un libro di chris mcnab pubblicato da leg edizioni nella collana biblioteca di arte militare maior acquista su lafeltrinelli a 22 80

napoleoniche guerre in dizionario di storia treccani - Oct 05 2022
web gli eserciti delle guerre napoleoniche per quasi due decenni le guerre napoleoniche insanguinarono l occidente dai ghiacci della russia alle aride terre della penisola
gli eserciti delle guerre napoleoniche di chris mcnab - Jun 01 2022
web le guerre napoleoniche il contributo è tratto da storia della civiltà europea a cura di umberto eco edizione in 75 ebook le guerre napoleoniche ereditano alcuni caratteri
petitfutacalpillescamarguearles logs erpnext - Feb 26 2022
web alpilles camargue arles 2018 2019 alpilles camargue arles 2015 petit futé arles alpilles camargue arles 2012 avec cartes photos avis des lecteurs arles alpilles camargue best of alpilles 2015 petit futé avec cartes photos avis des lecteurs petit futé alpilles arles camargue provence durable responsable 2023 petit
petit futa c alpilles camargue arles copy - Dec 07 2022
web petit futa c alpilles camargue arles book review unveiling the magic of language in an electronic era where connections and knowledge reign supreme the enchanting power of language has become more apparent than ever
petit futa c alpilles arles camargue copy uniport edu - Oct 05 2022
web sep 8 2023 petit futa c alpilles arles camargue 2 3 downloaded from uniport edu ng on september 8 2023 by guest spread across 22 zones offering almost 2 800 routes of between grade iii s and 9b and ranging from just a few metres in length to over 250 metres europe david atchinson jones 2002 the complete european rock climbing
petit futa c best of alpilles camargue arles pdf - Jun 13 2023
web petit futa c best of alpilles camargue arles california educator credentialing examinations feb 02 2023 07 19 22 registration and scheduling are now available for the 2022 2023 program year for all assessments c is a structured high level and general purpose programming language developed in the early 1970s by dennis
petit futa c alpilles arles camargue copy uniport edu - Nov 06 2022
web jul 14 2023 without difficulty as evaluation petit futa c alpilles arles camargue what you taking into consideration to read valais alps west selected climbs lindsay n griffin 1998 lofoten rock chris craggs 2008 05 lofoten is a magical area towering granite peaks rise above deep blue fjords with tiny wooden fishing villages squeezed
petit futé alpilles arles camargue by petit futé - Apr 30 2022
web petit futé alpilles arles camargue by petit futé petit futé alpilles arles camargue by petit futé scaricalo in pdf libreria la montagna rodeo societe rcs siret bilan autres activits de archives de france 1960 unionpdia cs helsinki fi les adresses les plus coquines dans les petit fut in moto in provenza e camargue itinerario e info
futa photos on flickr flickr - Jan 28 2022

web 208 125 the mugello is a historic region and valley in northern tuscany in italy corresponding to the course of the river sieve it is located to the north of the city of florence and includes the northernmost portion of the metropolitan city of florence the futa pass connects the mugello valley to the separate santerno river valley history

petit futa c alpilles arles camargue 2023 - Jan 08 2023

web alpilles camargue arles 2022 petit futé feb 17 2023 le territoire du massif des alpilles et de la camargue est typiquement provençal de par son cadre verdoyant où se côtoient vallées cours d eau comme le rhône plaines et pâturages les curiosités que le petit futé explore

zachmcmordie petit futa c best of alpilles camargue arles - Apr 11 2023

web best of alpilles camargue arles 2015 petit futÉ auzias dominique labourdette jean paul 9791033129271 books amazon ca source laugh of artist com petit futa c best of alpilles camargue arles getting the books petit futa c best of alpilles camargue arles now is not type of inspiring means you could not lonely going considering

petit futa c best of alpilles camargue arles pdf uniport edu - Mar 10 2023

web aug 20 2023 petit futa c best of alpilles camargue arles 2 3 downloaded from uniport edu ng on august 20 2023 by guest more like life than life itself but her genius comes at a terrible cost to her husband to the brother she left behind and to an actress who knows too much with shades of we are all completely beside

petit futé alpilles arles camargue by petit futé - Aug 03 2022

web petit futé alpilles arles camargue by petit futé author testweb2 globalvoices org 2023 08 14 20 31 37 subject petit futé alpilles arles camargue by petit futé keywords petit futé alpilles arles camargue by petit futé created date 8 14 2023 8 31 37 pm

petit futa c best of alpilles camargue arles - Aug 15 2023

web alpilles camargue arles 2022 petit futé dec 25 2022 le territoire du massif des alpilles et de la camargue est typiquement provençal de par son cadre verdoyant où se côtoient vallées cours d eau comme le rhône plaines et pâturages les curiosités que le petit futé explore

petit futa c best of alpilles camargue arles pdf pdf support ortax - May 12 2023

web petit futa c best of alpilles camargue arles pdf introduction petit futa c best of alpilles camargue arles pdf pdf freeride in the dolomites 2016 lleida climbs catalunya pete o donovan 2013 12 01 a guidebook to one of the finest sport climbing venues in europe the catalan province of lleida in northeast spain it

petit futé alpilles camargue arles by petit futé - Jun 01 2022

web aug 1 2023 april 21st 2020 in camargue le strade alternano lunghi rettilinei a stretti passaggi nella laguna ad alcuni tratti minori in strada bianca luberon e petit alpilles hanno strade spettacolari simili alle nostre alpi seconde solo al verdon

futa photos and premium high res pictures getty images - Dec 27 2021
web browse getty images premium collection of high quality authentic futa stock photos royalty free images and pictures futa stock photos are available in a variety of sizes and formats to fit your needs
download free petit futa c alpilles camargue arles pdf free - Sep 04 2022
web download free petit futa c alpilles camargue arles pdf free copy alpilles camargue arles 2021 petit futé alpilles camargue arles 2022 petit futé alpilles camargue arles 2019 2020 petit futé alpilles camargue arles 2023 petit futé arles et la
alpilles camargue arles 2019 2020 petit futa c gu download - Jul 14 2023
web von calès gerufen ein düsteres verstecktes tal in den alpilles mit dutzenden höhlen in denen vor jahrhunderten menschen lebten eine archäologin ist dort auf ein skelett gestoßen
petit futa c best of alpilles camargue arles - Jul 02 2022
web 4 petit futa c best of alpilles camargue arles 2023 01 08 on the move to help music books on music and sound recordings unesco shows award winning examples of advertising promotion graphic design posters book design illustration photography and television commercials
petit futa c alpilles arles camargue download only - Feb 09 2023
web 2 petit futa c alpilles arles camargue 2020 04 26 for lovers of the great outdoors and offers a range of hikes from easy to daytime strolls to long challenging treks plus reliable detailed maps and essential travel information south west coast path minehead to padstow jingo wobbly a guidebook to one of the finest sport climbing venues
petit futé alpilles arles camargue by petit futé - Mar 30 2022
web petit futé alpilles arles camargue by petit futé petit futé alpilles arles camargue by petit futé archives de france scaricalo in pdf libreria la montagna rodeo 1960 unionpdia audentia gestion fr cs helsinki fi in moto in provenza e camargue itinerario e info utili societe rcs siret bilan autres activits de
the breathing book vitality and good health through essential breath - Mar 03 2022
web buy the breathing book vitality and good health through essential breath work by farhi donna online on amazon ae at best prices fast and free shipping free returns cash on delivery available on eligible purchase
the breathing book vitality and good health throug - May 05 2022
web the breathing book vitality and good health throug living forever young nov 09 2021 how often do you feel sick and tired of feeling sick and tired this book will allow you to set yourself free in a body and mind that you can feel proud of again and in which you can go on all kinds of amazing adventures learn to get
the breathing book good health and vitality through essential breath - May 17 2023
web macmillan nov 15 1996 health fitness 238 pages in the breathing book internationally renowned yoga instructor donna

farhi presents a refreshingly simple and practical guide to reestablishing proper breathing techniques that will dramatically improve your physical and mental health

the breathing book good health and vitality through essential breath - Jun 06 2022

web the breathing book good health and vitality through essential breath work ebook farhi donna amazon in kindle store

the breathing book good health and vitality through essential breath - Jul 19 2023

web nov 15 1996 the breathing book good health and vitality through essential breath work donna farhi henry holt and company nov 15 1996 health fitness 256 pages a new approach to

the breathing book good health and vitality through bookclubs - Apr 04 2022

web more books by this author bringing yoga to life the everyday practice of enlightened living pathways to a centered body gentle yoga therapy for core stability healing back pain and moving with ease

the breathing book vitality and good health through essential breath - Dec 12 2022

web oct 18 2003 vitality and good health through essential breath work by donna farhi 4 0 1 review write a review published 18th october 2003 isbn 9780805042979 number of pages 256

the breathing book good health and vitality through essential breath - Nov 11 2022

web a groundbreaking approach to improving the quality of your life through the most readily accessible resource your breath these safe and easy to learn techniques can also be used to treat asthma and ease stress depression eating disorders insomnia arthritis chronic pain and other debilitating conditions

the breathing book vitality good health by farhi donna - Apr 16 2023

web in the breathing book internationally renowned yoga instructor donna farhi presents a refreshingly simple and practical guide to reestablishing proper breathing techniques that will dramatically improve your physical and mental health during infancy most of us breathed with complete ease

the breathing book vitality and good health through essential breath - Jan 13 2023

web nov 15 1996 description a new approach to improving quality of life through your most accessible resource your breath internationally renowned yoga instructor donna farhi presents a refreshingly simple and practical guide to reestablishing proper breathing techniques that will dramatically improve your physical and mental health

the breathing book good health and vitality through essential breath - Jul 07 2022

web the breathing book good health and vitality through essential breath work by farhi donna publication date 1996 topics breathing exercises publisher new york henry holt

the breathing book good health and vitality through essential breath - Sep 09 2022

web summary in the breathing book internationally renowned yoga instructor donna farhi presents a refreshingly simple and

practical guide to reestablishing proper breathing techniques that will dramatically improve your physical and mental health
the breathing book good health and vitality through essential breath - Mar 15 2023
web in the breathing book internationally renowned yoga instructor donna farhi presents a refreshingly simple and practical guide to reestablishing proper breathing techniques that will dramatically improve your physical and mental health
the breathing book good health and vitality through essential breath - Feb 14 2023
web nov 15 1996 overview a new approach to improving quality of life through your most accessible resource your breath internationally renowned yoga instructor donna farhi presents a refreshingly simple and practical guide to reestablishing proper breathing techniques that will dramatically improve your physical and mental health
the breathing book vitality and good health through essential breath - Sep 21 2023
web the breathing book vitality and good health through essential breath work farhi donna amazon sg books
the breathing book good health and vitality through essential breath - Aug 08 2022
web nov 15 1996 the breathing book good health and vitality through essential breath work kindle edition by farhi donna health fitness dieting kindle ebooks amazon com kindle store kindle ebooks health fitness dieting buy now with 1 click deliver to your kindle library give as a gift or purchase for a team or group learn more
the breathing book good health and vitality by farhi donna - Aug 20 2023
web nov 15 1996 in the breathing book internationally renowned yoga instructor donna farhi presents a refreshingly simple and practical guide to reestablishing proper breathing techniques that will dramatically improve your physical and mental health
the breathing book vitality and good health through essential breath - Jun 18 2023
web buy the breathing book vitality and good health through essential breath work illustrated by donna farhi isbn 9780805042979 from amazon s book store everyday low prices and free delivery on eligible orders
the breathing book good health and vitality through es - Oct 22 2023
web nov 15 1996 4 19 628 ratings42 reviews a new approach to improving quality of life through your most accessible resource your breath internationally renowned yoga instructor donna farhi presents a refreshingly simple and practical guide to reestablishing proper breathing techniques that will dramatically improve your physical and mental
the breathing book vitality good health through essential breath - Oct 10 2022
web a new approach to improving quality of life through your most accessible resource your breath internationally renowned yoga instructor donna farhi presents a refreshingly simple and practical guide to reestablishing proper breathing techniques that will dramatically improve your physical and mental health