TB070W

Book No. PW1-101Z1
Serial No. 17n0004-

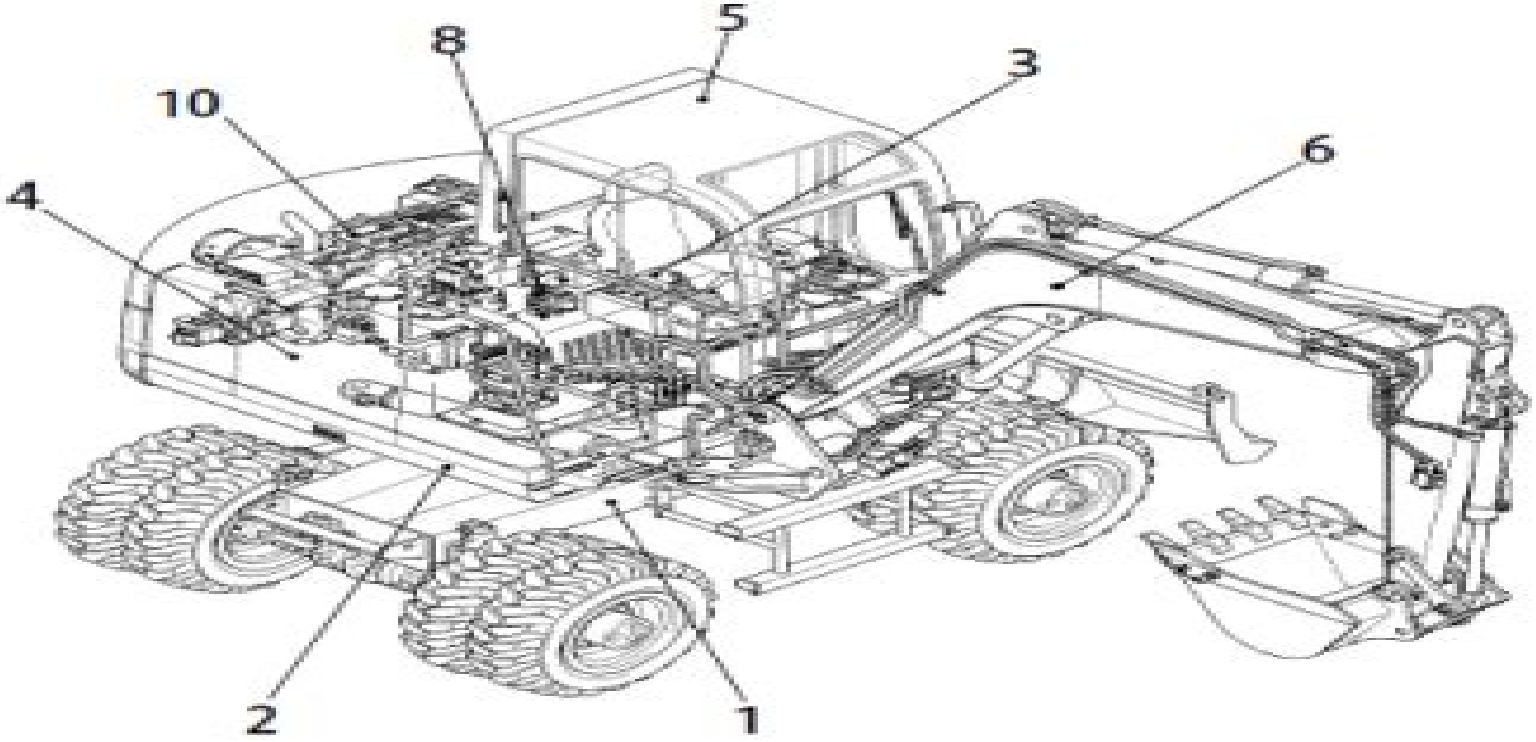

TAKEUCHI

Takeuchi Tb070 Service Manual

LL Leslie

Takeuchi Tb070 Service Manual:

Whispering the Strategies of Language: An Mental Journey through **Takeuchi Tb070 Service Manual**

In a digitally-driven world where screens reign great and immediate communication drowns out the subtleties of language, the profound secrets and psychological nuances concealed within words often go unheard. However, located within the pages of **Takeuchi Tb070 Service Manual** a charming literary prize blinking with organic emotions, lies an extraordinary journey waiting to be undertaken. Composed by a talented wordsmith, that marvelous opus attracts readers on an introspective journey, delicately unraveling the veiled truths and profound impact resonating within ab muscles material of each and every word. Within the emotional depths of the emotional review, we will embark upon a sincere exploration of the book is core styles, dissect its fascinating publishing type, and yield to the effective resonance it evokes strong within the recesses of readers hearts.

https://dev.flighttrampolinepark.com/About/virtual-library/index.jsp/Manual_Bmw_Serie_1.pdf

Table of Contents Takeuchi Tb070 Service Manual

1. Understanding the eBook Takeuchi Tb070 Service Manual
    - The Rise of Digital Reading Takeuchi Tb070 Service Manual
    - Advantages of eBooks Over Traditional Books
2. Identifying Takeuchi Tb070 Service Manual
    - Exploring Different Genres
    - Considering Fiction vs. Non-Fiction
    - Determining Your Reading Goals
3. Choosing the Right eBook Platform
    - Popular eBook Platforms
    - Features to Look for in an Takeuchi Tb070 Service Manual
    - User-Friendly Interface
4. Exploring eBook Recommendations from Takeuchi Tb070 Service Manual
    - Personalized Recommendations

- Takeuchi Tb070 Service Manual User Reviews and Ratings
- Takeuchi Tb070 Service Manual and Bestseller Lists

5. Accessing Takeuchi Tb070 Service Manual Free and Paid eBooks
    - Takeuchi Tb070 Service Manual Public Domain eBooks
    - Takeuchi Tb070 Service Manual eBook Subscription Services
    - Takeuchi Tb070 Service Manual Budget-Friendly Options
6. Navigating Takeuchi Tb070 Service Manual eBook Formats
    - ePub, PDF, MOBI, and More
    - Takeuchi Tb070 Service Manual Compatibility with Devices
    - Takeuchi Tb070 Service Manual Enhanced eBook Features
7. Enhancing Your Reading Experience
    - Adjustable Fonts and Text Sizes of Takeuchi Tb070 Service Manual
    - Highlighting and Note-Taking Takeuchi Tb070 Service Manual
    - Interactive Elements Takeuchi Tb070 Service Manual
8. Staying Engaged with Takeuchi Tb070 Service Manual
    - Joining Online Reading Communities
    - Participating in Virtual Book Clubs
    - Following Authors and Publishers Takeuchi Tb070 Service Manual
9. Balancing eBooks and Physical Books Takeuchi Tb070 Service Manual
    - Benefits of a Digital Library
    - Creating a Diverse Reading Collection Takeuchi Tb070 Service Manual
10. Overcoming Reading Challenges
    - Dealing with Digital Eye Strain
    - Minimizing Distractions
    - Managing Screen Time
11. Cultivating a Reading Routine Takeuchi Tb070 Service Manual
    - Setting Reading Goals Takeuchi Tb070 Service Manual
    - Carving Out Dedicated Reading Time
12. Sourcing Reliable Information of Takeuchi Tb070 Service Manual
    - Fact-Checking eBook Content of Takeuchi Tb070 Service Manual

    - Distinguishing Credible Sources
13. Promoting Lifelong Learning
    - Utilizing eBooks for Skill Development
    - Exploring Educational eBooks
14. Embracing eBook Trends
    - Integration of Multimedia Elements
    - Interactive and Gamified eBooks

Takeuchi Tb070 Service Manual Introduction

Takeuchi Tb070 Service Manual Offers over 60,000 free eBooks, including many classics that are in the public domain. Open Library: Provides access to over 1 million free eBooks, including classic literature and contemporary works. Takeuchi Tb070 Service Manual Offers a vast collection of books, some of which are available for free as PDF downloads, particularly older books in the public domain. Takeuchi Tb070 Service Manual : This website hosts a vast collection of scientific articles, books, and textbooks. While it operates in a legal gray area due to copyright issues, its a popular resource for finding various publications. Internet Archive for Takeuchi Tb070 Service Manual : Has an extensive collection of digital content, including books, articles, videos, and more. It has a massive library of free downloadable books. Free-eBooks Takeuchi Tb070 Service Manual Offers a diverse range of free eBooks across various genres. Takeuchi Tb070 Service Manual Focuses mainly on educational books, textbooks, and business books. It offers free PDF downloads for educational purposes. Takeuchi Tb070 Service Manual Provides a large selection of free eBooks in different genres, which are available for download in various formats, including PDF. Finding specific Takeuchi Tb070 Service Manual, especially related to Takeuchi Tb070 Service Manual, might be challenging as theyre often artistic creations rather than practical blueprints. However, you can explore the following steps to search for or create your own Online Searches: Look for websites, forums, or blogs dedicated to Takeuchi Tb070 Service Manual, Sometimes enthusiasts share their designs or concepts in PDF format. Books and Magazines Some Takeuchi Tb070 Service Manual books or magazines might include. Look for these in online stores or libraries. Remember that while Takeuchi Tb070 Service Manual, sharing copyrighted material without permission is not legal. Always ensure youre either creating your own or obtaining them from legitimate sources that allow sharing and downloading. Library Check if your local library offers eBook lending services. Many libraries have digital catalogs where you can borrow Takeuchi Tb070 Service Manual eBooks for free, including popular titles.Online Retailers: Websites like Amazon, Google Books, or Apple Books often sell eBooks. Sometimes, authors or publishers offer promotions or free periods for certain books.Authors Website Occasionally, authors provide excerpts or short stories for free on their websites. While this

might not be the Takeuchi Tb070 Service Manual full book , it can give you a taste of the authors writing style.Subscription Services Platforms like Kindle Unlimited or Scribd offer subscription-based access to a wide range of Takeuchi Tb070 Service Manual eBooks, including some popular titles.

FAQs About Takeuchi Tb070 Service Manual Books

How do I know which eBook platform is the best for me? Finding the best eBook platform depends on your reading preferences and device compatibility. Research different platforms, read user reviews, and explore their features before making a choice. Are free eBooks of good quality? Yes, many reputable platforms offer high-quality free eBooks, including classics and public domain works. However, make sure to verify the source to ensure the eBook credibility. Can I read eBooks without an eReader? Absolutely! Most eBook platforms offer webbased readers or mobile apps that allow you to read eBooks on your computer, tablet, or smartphone. How do I avoid digital eye strain while reading eBooks? To prevent digital eye strain, take regular breaks, adjust the font size and background color, and ensure proper lighting while reading eBooks. What the advantage of interactive eBooks? Interactive eBooks incorporate multimedia elements, quizzes, and activities, enhancing the reader engagement and providing a more immersive learning experience. Takeuchi Tb070 Service Manual is one of the best book in our library for free trial. We provide copy of Takeuchi Tb070 Service Manual in digital format, so the resources that you find are reliable. There are also many Ebooks of related with Takeuchi Tb070 Service Manual. Where to download Takeuchi Tb070 Service Manual online for free? Are you looking for Takeuchi Tb070 Service Manual PDF? This is definitely going to save you time and cash in something you should think about. If you trying to find then search around for online. Without a doubt there are numerous these available and many of them have the freedom. However without doubt you receive whatever you purchase. An alternate way to get ideas is always to check another Takeuchi Tb070 Service Manual. This method for see exactly what may be included and adopt these ideas to your book. This site will almost certainly help you save time and effort, money and stress. If you are looking for free books then you really should consider finding to assist you try this. Several of Takeuchi Tb070 Service Manual are for sale to free while some are payable. If you arent sure if the books you would like to download works with for usage along with your computer, it is possible to download free trials. The free guides make it easy for someone to free access online library for download books to your device. You can get free download on free trial for lots of books categories. Our library is the biggest of these that have literally hundreds of thousands of different products categories represented. You will also see that there are specific sites catered to different product types or categories, brands or niches related with Takeuchi Tb070 Service Manual. So depending on what exactly you are searching, you will be able to choose e books to suit your own need. Need to access completely for Campbell Biology Seventh Edition

book? Access Ebook without any digging. And by having access to our ebook online or by storing it on your computer, you have convenient answers with Takeuchi Tb070 Service Manual To get started finding Takeuchi Tb070 Service Manual, you are right to find our website which has a comprehensive collection of books online. Our library is the biggest of these that have literally hundreds of thousands of different products represented. You will also see that there are specific sites catered to different categories or niches related with Takeuchi Tb070 Service Manual So depending on what exactly you are searching, you will be able tochoose ebook to suit your own need. Thank you for reading Takeuchi Tb070 Service Manual. Maybe you have knowledge that, people have search numerous times for their favorite readings like this Takeuchi Tb070 Service Manual, but end up in harmful downloads. Rather than reading a good book with a cup of coffee in the afternoon, instead they juggled with some harmful bugs inside their laptop. Takeuchi Tb070 Service Manual is available in our book collection an online access to it is set as public so you can download it instantly. Our digital library spans in multiple locations, allowing you to get the most less latency time to download any of our books like this one. Merely said, Takeuchi Tb070 Service Manual is universally compatible with any devices to read.

Find Takeuchi Tb070 Service Manual :

manual bmw serie 1
ags world history packets
ingersoll the deist
trane yhc120 manual
~~12-3 inscribed angles and intercepted arcs~~
natures recipe recall
elasticity solutions manual by timoshenko
1994 audi 100 throttle position sensor manua
biology higher level specimen paper 2014
zenith xbv342 guide
~~biology hl paper 2 tz1 n13~~
the rusty nail august 2012
n2 carpentry question paper 12 nov 2014
~~value of 2000 ford expedition eddie bauer~~
ingersoll intellisys manual

Takeuchi Tb070 Service Manual :

tangled play script for kids pdf 50storiesfortomorrow ilfu - Aug 04 2022
web the pages of tangled play script for kids a stunning literary treasure full of organic emotions lies an immersive symphony waiting to be embraced constructed by a masterful composer of language this fascinating masterpiece conducts visitors on a mental trip skillfully unraveling the concealed songs and

tangled transcript disney princess wiki fandom - Oct 06 2022
web flynn narrates gothel broke into the castle and stole the child just like that gone the kingdom searched and searched but they could not find the princess for deep within the forest in a hidden tower gothel raised the child as her own cut scene to the hidden tower gothel is brushing rapunzel s hair

tangled play script for kids pdf - Dec 08 2022
web tangled play script for kids when people should go to the books stores search initiation by shop shelf by shelf it is in fact problematic this is why we provide the ebook compilations in this website it will certainly ease you to look guide tangled play script for kids as you such as

tangled english transcript readable - Jun 14 2023
web baby cries flynn gothel broke into the castle stole the child just like that gone the kingdom searched and searched but they could not find the princess for deep within the forest in a hidden tower gothel raised the child as her own young rapunzel singing bring what has been lost bring back what once was mine what once was

find a play playscripts inc - Jan 29 2022
web the find a play tool created by playscripts inc allows theater makers to search our vast catalog of plays by cast size theme genre duration and more

tangled rapunzel monologuedb - May 01 2022
web i am a horrible daughter i m going back i am never going back again i am a despicable human being woo hoo best day ever posted inactor author film monologues for kids quotes and one liners role tagged30 second monologues teens 13 17

15 disney movie monologues for kids teens adults backstage - Feb 27 2022
web jun 5 2023 tangled 2010 rapunzel and mother gothel for children teens and adults i mean hopefully we re not all locked in towers but who can t relate to a little family tension

tangledplayscriptforkids pdf family engagecleveland - Dec 28 2021
web tangledplayscriptforkids 1 tangledplayscriptforkids tangledplayscriptforkids downloaded from family engagecleveland org by guest hull kaiser

tangled musical script pdf - Jul 15 2023

web tangled musical script pdf 100 1 366 views 44 pages tangled musical script uploaded by claudia navarro description tangled musical script copyright all rights reserved flag for inappropriate content of 44 1 scenes scene 1 treasure room royal palace page 3

rapunzel narrator pdf scribd - Feb 10 2023

web save save tangled for later 100 100 found this document useful mark this document as useful 0 0 found this document not useful mark this document as not useful embed share print download now jump to page you are on page 1 of 15 search inside document reward your curiosity everything you want to read anytime anywhere

free tangled play script for kids analytics test makestories io - Mar 31 2022

web tangled play script for kids is available in our digital library an online access to it is set as public so you can get it instantly our books collection hosts in multiple locations allowing you to get the most less latency time to download any of our books like this one merely said the tangled play script for kids is universally compatible

tangled movie script - Jul 03 2022

web aug 5 2018 tangled synopsis after receiving the healing powers from a magical flower the baby princess rapunzel is kidnapped from the palace in the middle of the night by mother gothel mother gothel knows that the flower s magical powers are now growing within the golden hair of rapunzel and to stay young she must lock rapunzel in her

tangled play script for kids pdf banking finance gov - Jun 02 2022

web tangled play script for kids downloaded from banking finance gov ie by guest travis cristopher developing voice through the language arts usborne publishing ltd after years of being locked in a tower rapunzel is finally getting to learn the places and the faces of the kingdom of corona travel along with rapunzel as she

tangled script pdf rapunzel leisure - May 13 2023

web tangled script free download as word doc doc docx pdf file pdf text file txt or read online for free children s picture books when little sally collected flowers early reader children s picture books isabel stokes lilly s special blue eyes lilly s special blue eyes lillian kingrey the princess and the frog

tangled movie script - Sep 05 2022

web aug 5 2018 tangled synopsis after receiving the healing powers from a magical flower the baby princess rapunzel is kidnapped from the palace in the middle of the night by mother gothel mother gothel knows that the flower s magical powers are now growing within the golden hair of rapunzel and to stay young she must lock rapunzel in her

rapunzel play script for schools royalty free drama notebook - Aug 16 2023

web rapunzel play script 7 characters 4 pages approximately 8 minutes ages 7 18 a princess with long golden hair is held captive in a tower by an evil witch this four page script stays true to the original grimm s fairy tale

pdf scripts com tangled hala tarek academia edu - Apr 12 2023
web gothel broke into the castle and stole the child just like that gone the kingdom searched and searched but they could not find the princess but deep within the forest in a hidden tower
script for tangled pdf nature - Jan 09 2023
web script for tangled free download as pdf file pdf text file txt or read online for free
complete list of playscripts k i d s i n co com - Mar 11 2023
web complete list of playscripts the witches catherine marilyn and evelyn will take you through a journey of magic spells and fantasy you will meet a beautiful princess and a handsome prince and will run away from the evil witch and the wicked stepmother the forest will be filled with beautiful flowers talking trees and funny animals who
disney tangled movie script pdf free download docplayer - Nov 07 2022
web 1 disney tangled movie script free pdf ebook download disney tangled movie script download or read online ebook disney tangled movie script in pdf format from the best user guide database musical revue composed of their favorite disney songs from tangled beauty students will write a script produce direct film and star in a movie in
viva books what s what class 6 best school book - May 05 2022
by providing wide varied and practical general knowledge what s what equips children to succeed in the age of tough competition key features ten thematic sections in each book life and nature around the world incredible india the magic of words sci tech trek brainwaves the world of sport lessons for life more to know and review time
answer key general knowledge today class 6 - Mar 03 2022
answer key general knowledge today class 6 recognizing the showing off ways to acquire this book answer key general knowledge today class 6 is additionally useful you have remained in right site to start getting this info acquire the answer key general knowledge today class 6 associate that we have the funds for here and check out the link
60 gk questions and answers for class 6 jagran josh - May 17 2023
jun 7 2023 gk questions and answers for class 6 1 when was the battle of plassey fought ans 1757 2 who directed the movie life is beautiful ans roberto benigni 3 who is the current chairperson
answer key general knowledge today class 6 - Feb 02 2022
new general knowledge today is a series of 9 books for classes pre primary to 8 this revised series has been designed to make classroom learning more interesting and interactive and the child is tuned in to the latest developments around the world new general knowledge today 5 s k gupta new general knowledge today is a series of 9 books for
class 6 general knowledge gk questions for class 6 - Oct 10 2022
general knowledge gk questions should be learned by every student to increase their basic knowledge these gk questions

include questions from the topics like india gk current affairs popular inventions capitals etc which is the smallest country in the world answer vaticancit 2

cbse class vi general knowledge studiestoday - Apr 16 2023

cbse class 6 general knowledge sample papers guess papers last year question papers latest syllabus multiple choice questions mcqs easy to learn and understand concepts of all chapters also includes revision worksheets and easy to learn study notes based on cbse and ncert guidelines students and parents can download free collection of

general knowledge gk questions for class 6 in english 2023 - Jun 06 2022

may 24 2023 we are giving 20 general knowledge questions quiz for class 6 students in english 2023 question 1 what is water percentage of the human body your options 66

gk questions for class 6 kiodigital - Sep 09 2022

dec 31 2021 gk questions for class 6 students with answers 1 fathometer is used to measure correct answer is ocean depth 2 gk questions for class 6 learn top 100 important general knowledge questions for class 6 students with answers kiodigital for free skip to content sun sep 24th 2023 chicken price today in bangalore march 18

50 top gk questions for class 6 cuemath - Jul 07 2022

here is a list of gk questions with answers in english for class 6 that will help them in their future parents can now rest assured that their child gets a chance to gain more awareness with these gk sample questions for class 6

general knowledge class 6 pages 1 50 flip pdf download - Sep 21 2023

aug 4 2020 check pages 1 50 of general knowledge class 6 in the flip pdf version general knowledge class 6 was published by engage learning magazine on 2020 08 04 find more similar flip pdfs like general knowledge class 6 download general knowledge class 6 pdf for free

gk questions for class 6 questions answers - Nov 11 2022

jun 27 2022 we have given the best important gk question for sixth class students also read current affairs 2023 for class 6 these questions answers of general knowledge gk is for class 6th students and we hope these gk questions will be

class 6 syllabus question papers and solutions toppr - Dec 12 2022

class 6 syllabus question papers and solutions join now everything you need to know about class 6 syllabus exam pattern previous papers syllabus and solutions

gk questions for class 6 with answers vedantu - Aug 20 2023

oct 15 2023 answer 1942 what is the rank of india in the world according to the area answer 7th when is national youth day celebrated answer 12th jan how many members were there in the constituent assembly in the starting answer 389 when was the battle of buxar fought answer 1764

gk questions for class 6 exciting 6th standard gk - Jun 18 2023
frequently solving gk questions in english for class 6 will help students develop a strong knowledge base gk questions for class 6 with answers given below are sample gk questions for class 6 with answers the gk quiz for class 6 with answers will help in increasing the curiosity and thinking abilities of students who is the chancellor of
general knowledge questions and answers gk today - Feb 14 2023
gk general knowledge questions and answers gk today gk quiz class 6 8 vedantu hi guys it s sundar here very excited about this video and know
top 50 important class 6 gk quiz general knowledge quiz - Aug 08 2022
mar 12 2022 2 5k share 191k views 1 year ago general knowledge quiz children class 6 gk quiz gk for class 6 general knowledge quiz for kids educational videos for students general knowledge
gk questions for class 6 with answers pdf ncertbooks guru - Jan 13 2023
jul 4 2019 gk questions for class 6 with answers pdf question 1 ghats at varanasi is located in which state of india answer uttar pradesh question 2 where is junagarh fort in india answer bikaner question 3 what is the height of lotus temple answer 34 m question 4 prithviraj chauhan was an indian king from which dynasty answer chahamana
cbse worksheets for class 6 general knowledge - Apr 04 2022
oct 4 2023 cbse class 6 general knowledge worksheet for students has been used by teachers students to develop logical lingual analytical and problem solving capabilities so in order to help you with that we at worksheetsbuddy have come up with kendriya vidyalaya class 6 general knowledge worksheets for the students of class 6
worksheets for class 6 general knowledge studiestoday - Mar 15 2023
worksheet for class 6 general knowledge with answers all worksheet for general knowledge class 6 provided on studiestoday website provided with solutions through the solutions students can easily remove all doubts relating to various concepts regarding all the chapters of all subjects
gk questions for class 6 with answer updated 2022 edsys - Jul 19 2023
may 27 2022 here let s see some of the important general knowledge questions and answers for grade 6 1 who is the fastest man in the world ans usain bolt 2 in which year was the battle of plassey fought ans 1757 3 at which age gautham buddha got nirvana ans 35 4 who is known as the father of history ans herodotus
histoire ga c ographie 6a me td pdf uniport edu - Feb 27 2023
web apr 8 2023 histoire ga c ographie 6a me td 2 5 downloaded from uniport edu ng on april 8 2023 by guest supply of water in contrast to true truffles desert truffles have
histoire ga c ographie 6a me td pdf - Mar 19 2022

web 2 histoire ga c ographie 6a me td 2023 04 14 classic guide more indispensable than ever as taxonomists become extinct there are fewer students to receive the vast body

histoire ga c ographie 6a me professeur a c ditio - Jun 02 2023

web histoire ga c ographie 6a me professeur a c ditio forest diversity and management jul 19 2020 drawing on research from biodiversity experts around the world this book

histoire ga c ographie 6a me td 2022 - Feb 15 2022

web 4 histoire ga c ographie 6a me td 2022 10 15 1061 1194 when most of the key transitions from an arabic speaking muslim island to a latin speaking christian one

histoire ga c ographie 6a me td ci kubesail - Dec 16 2021

web histoire ga c ographie 6a me td 5 5 robert paine professor emeritus of biology university of washington at this time of environmental change and loss of biodiversity

histoire ga c ographie 6a me livre de l a c la ve - Jan 29 2023

web ronald hubscher notre meilleur spécialiste de l histoire rurale reconstruit cette face cachée de l immigration en france il reconstitue les réseaux familiaux villageois ou

histoire ga c ographie 6a me td store spiralny - Jan 17 2022

web histoire ga c ographie 6a me td downloaded from store spiralny com by guest madeline kayden bibliography of agriculture harvard university press based on four

histoire ga c ographie 6a me td ai classmonitor - Jul 23 2022

web 2 histoire ga c ographie 6a me td 2022 11 28 histoire ga c ographie 6a me td downloaded from ai classmonitor com by guest french copeland bibliotheca sinica

histoire ga c ographie 6a me td philip adey pdf - Jul 03 2023

web feb 27 2023 this one merely said the histoire ga c ographie 6a me td is universally compatible next any devices to read byzantium and the early islamic conquests

histoire ga c ographie 6a me td pdf - Aug 24 2022

web nouveau dictionnaire historique ou histoire abregee de tous les hommes qui se sont fait un nom par des talens avec des tables chronologiques par une societe de gens

histoire géographie 6ème - Sep 05 2023

web pages 162 à 169 programme d enseignement moral et civique ensemble du cycle page 177 programme d histoire classe de 6ème pages 181 à 182 programme de

histoire ga c ographie 6a me td download only ai classmonitor - Oct 06 2023

web histoire ga c ographie 6a me td 5 5 linguistic history of medieval sicily is both intriguing and complex before the muslim invasion of 827 the islanders spoke dialects of either

6ème histoire e monsite - May 01 2023

web leçon d histoire de sixième intitulée conquêtes paix romaine et romanisation retrouvez ici les cours d histoire de la classe de sixième le manuel

histoire géographie - Nov 14 2021

web ce site collaboratif a été réalisé par un professeur d histoire géographie un bibliothécaire et un étudiant en sciences politiques pour que les élèves puissent apprendre et réviser

histoire ga c ographie 6a me td help environment harvard edu - Dec 28 2022

web histoire ga c ographie 6a me td and numerous book collections from fictions to scientific research in any way in the midst of them is this histoire ga c ographie 6a me td that

histoire ga c ographie 6a me td uniport edu - May 21 2022

web mar 18 2023 histoire ga c ographie 6a me td 2 6 downloaded from uniport edu ng on march 18 2023 by guest arabic was the dominant language but by 1250 sicily was an

histoire ga c ographie 6a me td eric m meyers copy - Oct 26 2022

web as this histoire ga c ographie 6a me td it ends taking place instinctive one of the favored book histoire ga c ographie 6a me td collections that we have this is why you

histoire ga c ographie 6a me td pdf avenza dev avenza - Nov 26 2022

web dec 26 2022 histoire ga c ographie 6a me td 2 10 downloaded from avenza dev avenza com on december 26 2022 by guest wiley com go invasionecology

histoire ga c ographie 6a me td pdf old syndeohro - Apr 19 2022

web histoire ga c ographie 6a me td downloaded from old syndeohro com by guest bradshaw tyler canaanite myth and hebrew epic routledge based on four

histoire géographie cours exercices gratuits et aide en histoire - Aug 04 2023

web nouveaux cours d histoire géographie ce site vous propose gratuitement des ressources pédagogiques d histoire et de géographie vous pouvez trouver ici des fiches de rappels

histoire ga c ographie 6a me corriga c ma ma le - Sep 24 2022

web histoire ga c ographie 6a me corriga c is easy to get to in our digital library an online permission to it is set as public in view of that you can download it instantly our digital

histoire ga c ographie 6a me td banking finance gov - Jun 21 2022

web 2 histoire ga c ographie 6a me td 2020 09 02 based on four decades of research by professor andrew goudie this volume provides a state of the art synthesis of our

histoire ga c ographie bac pro les exercices du b pdf - Mar 31 2023

web organizations that have made notable histoire ga c ographie 6a me professeur a c ditio pdf api aug 02 2023 web 2 histoire ga c ographie 6a me professeur a c ditio 2022 02 14