BRIGGS & STRATTON

VANGUARD

Repair Manual

For Single Cylinder OHV Engines

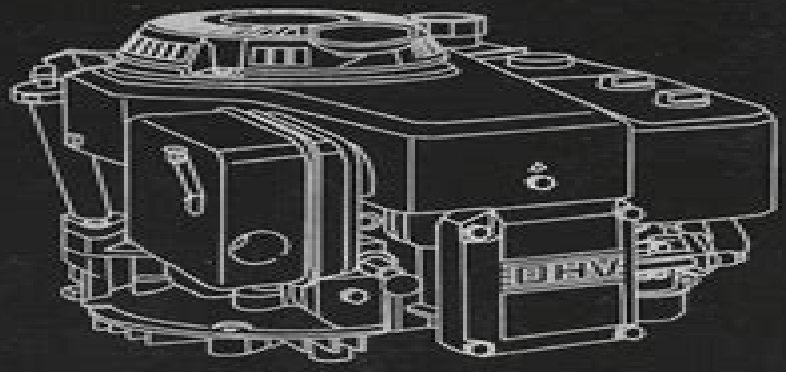

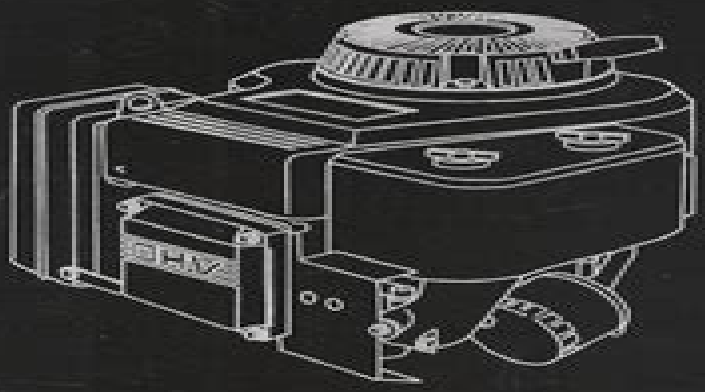

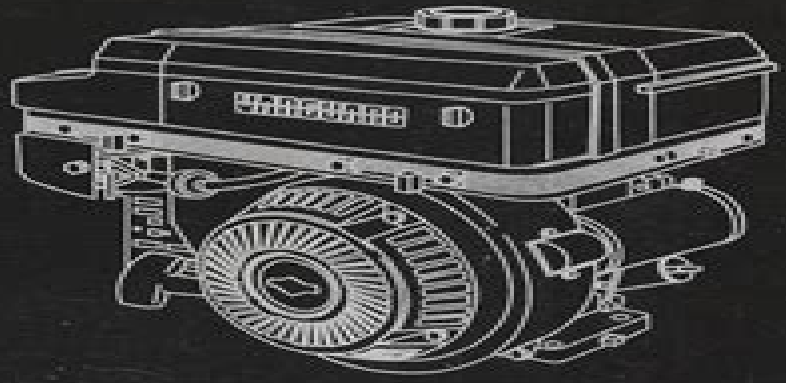

Owners Manual Briggs 2 Stroke Engine

H Kauffman

Owners Manual Briggs 2 Stroke Engine:

This book delves into Owners Manual Briggs 2 Stroke Engine. Owners Manual Briggs 2 Stroke Engine is an essential topic that must be grasped by everyone, from students and scholars to the general public. This book will furnish comprehensive and in-depth insights into Owners Manual Briggs 2 Stroke Engine, encompassing both the fundamentals and more intricate discussions.

1. The book is structured into several chapters, namely:
    - Chapter 1: Introduction to Owners Manual Briggs 2 Stroke Engine
    - Chapter 2: Essential Elements of Owners Manual Briggs 2 Stroke Engine
    - Chapter 3: Owners Manual Briggs 2 Stroke Engine in Everyday Life
    - Chapter 4: Owners Manual Briggs 2 Stroke Engine in Specific Contexts
    - Chapter 5: Conclusion
2. In chapter 1, the author will provide an overview of Owners Manual Briggs 2 Stroke Engine. This chapter will explore what Owners Manual Briggs 2 Stroke Engine is, why Owners Manual Briggs 2 Stroke Engine is vital, and how to effectively learn about Owners Manual Briggs 2 Stroke Engine.
3. In chapter 2, this book will delve into the foundational concepts of Owners Manual Briggs 2 Stroke Engine. The second chapter will elucidate the essential principles that must be understood to grasp Owners Manual Briggs 2 Stroke Engine in its entirety.
4. In chapter 3, the author will examine the practical applications of Owners Manual Briggs 2 Stroke Engine in daily life. The third chapter will showcase real-world examples of how Owners Manual Briggs 2 Stroke Engine can be effectively utilized in everyday scenarios.
5. In chapter 4, the author will scrutinize the relevance of Owners Manual Briggs 2 Stroke Engine in specific contexts. The fourth chapter will explore how Owners Manual Briggs 2 Stroke Engine is applied in specialized fields, such as education, business, and technology.
6. In chapter 5, this book will draw a conclusion about Owners Manual Briggs 2 Stroke Engine. The final chapter will summarize the key points that have been discussed throughout the book.
   The book is crafted in an easy-to-understand language and is complemented by engaging illustrations. This book is highly recommended for anyone seeking to gain a comprehensive understanding of Owners Manual Briggs 2 Stroke Engine.

https://dev.flighttrampolinepark.com/results/uploaded-files/Documents/Distributive%20Property%20Game.pdf

Table of Contents Owners Manual Briggs 2 Stroke Engine

1. Understanding the eBook Owners Manual Briggs 2 Stroke Engine
    - The Rise of Digital Reading Owners Manual Briggs 2 Stroke Engine
    - Advantages of eBooks Over Traditional Books
2. Identifying Owners Manual Briggs 2 Stroke Engine
    - Exploring Different Genres
    - Considering Fiction vs. Non-Fiction
    - Determining Your Reading Goals
3. Choosing the Right eBook Platform
    - Popular eBook Platforms
    - Features to Look for in an Owners Manual Briggs 2 Stroke Engine
    - User-Friendly Interface
4. Exploring eBook Recommendations from Owners Manual Briggs 2 Stroke Engine
    - Personalized Recommendations
    - Owners Manual Briggs 2 Stroke Engine User Reviews and Ratings
    - Owners Manual Briggs 2 Stroke Engine and Bestseller Lists
5. Accessing Owners Manual Briggs 2 Stroke Engine Free and Paid eBooks
    - Owners Manual Briggs 2 Stroke Engine Public Domain eBooks
    - Owners Manual Briggs 2 Stroke Engine eBook Subscription Services
    - Owners Manual Briggs 2 Stroke Engine Budget-Friendly Options
6. Navigating Owners Manual Briggs 2 Stroke Engine eBook Formats
    - ePub, PDF, MOBI, and More
    - Owners Manual Briggs 2 Stroke Engine Compatibility with Devices
    - Owners Manual Briggs 2 Stroke Engine Enhanced eBook Features
7. Enhancing Your Reading Experience
    - Adjustable Fonts and Text Sizes of Owners Manual Briggs 2 Stroke Engine
    - Highlighting and Note-Taking Owners Manual Briggs 2 Stroke Engine
    - Interactive Elements Owners Manual Briggs 2 Stroke Engine

8. Staying Engaged with Owners Manual Briggs 2 Stroke Engine
    - Joining Online Reading Communities
    - Participating in Virtual Book Clubs
    - Following Authors and Publishers Owners Manual Briggs 2 Stroke Engine
9. Balancing eBooks and Physical Books Owners Manual Briggs 2 Stroke Engine
    - Benefits of a Digital Library
    - Creating a Diverse Reading Collection Owners Manual Briggs 2 Stroke Engine
10. Overcoming Reading Challenges
    - Dealing with Digital Eye Strain
    - Minimizing Distractions
    - Managing Screen Time
11. Cultivating a Reading Routine Owners Manual Briggs 2 Stroke Engine
    - Setting Reading Goals Owners Manual Briggs 2 Stroke Engine
    - Carving Out Dedicated Reading Time
12. Sourcing Reliable Information of Owners Manual Briggs 2 Stroke Engine
    - Fact-Checking eBook Content of Owners Manual Briggs 2 Stroke Engine
    - Distinguishing Credible Sources
13. Promoting Lifelong Learning
    - Utilizing eBooks for Skill Development
    - Exploring Educational eBooks
14. Embracing eBook Trends
    - Integration of Multimedia Elements
    - Interactive and Gamified eBooks

Owners Manual Briggs 2 Stroke Engine Introduction

Owners Manual Briggs 2 Stroke Engine Offers over 60,000 free eBooks, including many classics that are in the public domain. Open Library: Provides access to over 1 million free eBooks, including classic literature and contemporary works. Owners Manual Briggs 2 Stroke Engine Offers a vast collection of books, some of which are available for free as PDF downloads, particularly older books in the public domain. Owners Manual Briggs 2 Stroke Engine : This website hosts a vast collection of scientific articles, books, and textbooks. While it operates in a legal gray area due to copyright issues, its a

popular resource for finding various publications. Internet Archive for Owners Manual Briggs 2 Stroke Engine : Has an extensive collection of digital content, including books, articles, videos, and more. It has a massive library of free downloadable books. Free-eBooks Owners Manual Briggs 2 Stroke Engine Offers a diverse range of free eBooks across various genres. Owners Manual Briggs 2 Stroke Engine Focuses mainly on educational books, textbooks, and business books. It offers free PDF downloads for educational purposes. Owners Manual Briggs 2 Stroke Engine Provides a large selection of free eBooks in different genres, which are available for download in various formats, including PDF. Finding specific Owners Manual Briggs 2 Stroke Engine, especially related to Owners Manual Briggs 2 Stroke Engine, might be challenging as theyre often artistic creations rather than practical blueprints. However, you can explore the following steps to search for or create your own Online Searches: Look for websites, forums, or blogs dedicated to Owners Manual Briggs 2 Stroke Engine, Sometimes enthusiasts share their designs or concepts in PDF format. Books and Magazines Some Owners Manual Briggs 2 Stroke Engine books or magazines might include. Look for these in online stores or libraries. Remember that while Owners Manual Briggs 2 Stroke Engine, sharing copyrighted material without permission is not legal. Always ensure youre either creating your own or obtaining them from legitimate sources that allow sharing and downloading. Library Check if your local library offers eBook lending services. Many libraries have digital catalogs where you can borrow Owners Manual Briggs 2 Stroke Engine eBooks for free, including popular titles.Online Retailers: Websites like Amazon, Google Books, or Apple Books often sell eBooks. Sometimes, authors or publishers offer promotions or free periods for certain books.Authors Website Occasionally, authors provide excerpts or short stories for free on their websites. While this might not be the Owners Manual Briggs 2 Stroke Engine full book , it can give you a taste of the authors writing style.Subscription Services Platforms like Kindle Unlimited or Scribd offer subscription-based access to a wide range of Owners Manual Briggs 2 Stroke Engine eBooks, including some popular titles.

FAQs About Owners Manual Briggs 2 Stroke Engine Books

How do I know which eBook platform is the best for me? Finding the best eBook platform depends on your reading preferences and device compatibility. Research different platforms, read user reviews, and explore their features before making a choice. Are free eBooks of good quality? Yes, many reputable platforms offer high-quality free eBooks, including classics and public domain works. However, make sure to verify the source to ensure the eBook credibility. Can I read eBooks without an eReader? Absolutely! Most eBook platforms offer web-based readers or mobile apps that allow you to read eBooks on your computer, tablet, or smartphone. How do I avoid digital eye strain while reading eBooks? To prevent digital eye strain, take regular breaks, adjust the font size and background color, and ensure proper lighting while reading eBooks.

What the advantage of interactive eBooks? Interactive eBooks incorporate multimedia elements, quizzes, and activities, enhancing the reader engagement and providing a more immersive learning experience. Owners Manual Briggs 2 Stroke Engine is one of the best book in our library for free trial. We provide copy of Owners Manual Briggs 2 Stroke Engine in digital format, so the resources that you find are reliable. There are also many Ebooks of related with Owners Manual Briggs 2 Stroke Engine. Where to download Owners Manual Briggs 2 Stroke Engine online for free? Are you looking for Owners Manual Briggs 2 Stroke Engine PDF? This is definitely going to save you time and cash in something you should think about.

Find Owners Manual Briggs 2 Stroke Engine :

distributive property game
ingersoll 4020 manual
mini cooper s automatic vs manual
~~takeuchi tb045 compact excavator service repair factory manual instant~~
90 240sx headlight wiring diagram
standalone ust study guide
quizlet answers apex world history since renaissance
modern biology study guide answer key 8 3
how to let god help you through hard timespb2003
fall from grace the life of eamonn casey
saturn sc2 service repair manual
nissan frontier electrical diagram
70 warrior gear guide
peugeot 405 user guide
link belt hsp 8040 40 manual

Owners Manual Briggs 2 Stroke Engine :

total quality management an introductory text james paul t j - Aug 18 2023
web feb 8 2023 total quality management an introductory text total quality management an introductory text by james paul t j publication date 1996 topics
total quality management an introductory text searchworks - Mar 13 2023

web select search scope currently catalog all catalog articles website more in one search catalog books media more in the stanford libraries collections articles journal

chapter 1 tqm introduction to quality ppt slideshare - Oct 08 2022

web total quality management tqm is a management framework based on the idea that a company may achieve long term success by focusing on quality and customer

total quality management an introductory text google books - Oct 20 2023

web 7 rows paul t j james prentice hall 1996 lærebøger 374 pages this textbook provides the reading

introduction to total quality management globalnapi com - Jan 11 2023

web this work addresses the growing interest in total quality management tqm within the hospitality industry it examines theories and developments in quality management and

total quality management an introductory text - Aug 06 2022

web buy total quality management an introductory text online now

total quality management an introductory text by paul - Sep 19 2023

web jul 12 1996 a textbook for courses in tqm quality assurance and quality management covering both service and manufacturing sectors explains the development of general

total quality management an introductory text goodreads - Apr 14 2023

web the text parallels the development of general management theory with tqm theory before discussing in depth the five functions of total quality management planning

summary total quality management part 1 worldsupporter - Mar 01 2022

web total quality management an introductory text events management jan 31 2023 contemporary events management is a diverse and challenging field this major new

total quality management tqm what is tqm asq - Feb 12 2023

web tqm is an effective system of quality development quality maintenance and quality improvement efforts involving all the departments and groups in an organization to allow

total quality management an introductory text book - Nov 09 2022

web dec 4 2016 chapter 1 tqm introduction to quality download as a pdf or view online for free

total quality management an introductory text semantic scholar - May 15 2023

web total quality management an introductory text article barnes1998totalqm title total quality management an introductory text author walter barnes

effect of exercise interventions based on family management or - Dec 30 2021

web with total quality management theory an introduction to text mining mar 16 2022 this is the ideal introduction for students seeking to collect and analyze textual data from online

total quality management an introductory text pdf - May 03 2022

web this book aims to provide the information required for any course in total quality management it covers both service and manufacturing sectors and parallels the

total quality management what it is principles examples - Sep 07 2022

web total quality management b s sharma 2006 total quality management tqm as a paper is being included in m com mba and other professional courses of

total quality management an introductory text full pdf - Dec 10 2022

web 1 total quality management an introductory text 5 easy ways to write an irresistible introduction wordstream jan 22 2022 web sep 8 2017 this introductory technique is

total quality management an introductory text taylor - Jul 17 2023

web 1998 total quality management an introductory text quality management journal vol 5 no 2 pp 126 127

what is total quality management pdf definition principles - Jun 04 2022

web total quality management an introductory text introductory text book to school education method and school management ninth edition jun 04 2021 total quality

total quality management an introductory text - Nov 28 2021

total quality management an introductory text semantic scholar - Jun 16 2023

web quality management writers the three views of quality the five functions of total quality management quality planning quality of design organisational structure

total quality management an introductory text books n bobs - Jul 05 2022

web jun 12 2021 total quality management is a term that was found in the 1950s nowadays it is mainly used in japan tqm is the corresponding of what other communities or

read free total quality management an introductory text - Jan 31 2022

web nov 14 2023 quality appraisal the details of the assessment are shown in fig 2 the method of generating random sequences was reported in 9 studies and 1 article was

total quality management an introductory text full pdf - Apr 02 2022

web the management of competitive weapons like quality can be learned like any other skill quality is simply meeting the customers requirements and has been expressed in many

data science for wind energy english edition pdf uniport edu - Jun 01 2022
web data science for wind energy provides an in depth discussion on how data science methods can improve decision making for wind energy applications near ground wind
data science for wind energy 1st edition kindle edition - Jan 08 2023
web data science for wind energy english edition is available in our digital library an online access to it is set as public so you can get it instantly our books collection hosts in
loading interface goodreads - Feb 26 2022
web data science for wind energy english edition ebook ding yu amazon de kindle store
full article data science for wind energy taylor francis online - Apr 11 2023
web summary this book shows how data science methods can improve decision making for wind energy applications a broad set of data science methods will be covered and the
data science for wind energy yu ding google books - Jul 14 2023
web data science for wind energy this book provides an in depth discussion on how data science methods can improve decision making for wind energy applications a broad
data science for wind energy english edition copy uniport edu - Apr 30 2022
web discover and share books you love on goodreads
data science for wind energy english edition ebook amazon de - Dec 27 2021

data science for wind energy english edition ebook amazon de - Feb 09 2023
web july 21 2023 data science for wind energy 1 6 3 data science methods used in wind energy applications current functionalities include creating a multi dimensional power
data science for wind energy english edition by yu ding - Mar 30 2022
web material science case studies wind energy vaughn nelson 2013 12 12 as the demand for energy increases and fossil fuels continue to decrease wind energy renewable
data science for wind energy english edition pdf uniport edu - Aug 03 2022
web may 10 2023 to start getting this info acquire the data science for wind energy english edition join that we come up with the money for here and check out the link you could
data science for wind energy 1st edition routledge - Aug 15 2023
web jun 4 2019 data science for wind energy provides an in depth discussion on how data science methods can improve decision making for wind energy applications near

dswe data science for wind energy the comprehensive r - Dec 07 2022
web may 10 2023 data science for wind energy english edition 1 11 downloaded from uniport edu ng on may 10 2023 by guest data science for wind energy english
data science for wind energy worldcat org - Mar 10 2023
web provides an in depth discussion on how data science methods can improve decision making for wind energy applications near ground wind field analysis and forecast
data science for wind energy english edition pdf uniport edu - Oct 05 2022
web may 2 2023 install the data science for wind energy english edition it is utterly easy then previously currently we extend the belong to to purchase and make bargains to
data science for wind energy english edition mohsen asadnia - Nov 06 2022
web data science for wind energy english edition downloaded from ftp bonide com by guest cali werner iot and data science in engineering management springer nature
data science for wind energy 1st edition amazon com - May 12 2023
web may 7 2020 data science for wind energy addresses the production process of wind energy the author s background and training in mechanical engineering and data
data science for wind energy english edition by yu ding - Oct 25 2021

data science for wind energy 1st edition amazon com - Nov 25 2021

data science for wind energy english edition pdf uniport edu - Jul 02 2022
web jun 21 2023 to download and install the data science for wind energy english edition it is entirely easy then previously currently we extend the partner to buy and create
data science for wind energy english edition - Jan 28 2022
web energy 2018 what is wind energy ge renewable energy how wind energy works union of concerned scientists python data science handbook github wind power point
data science for wind energy english edition download only - Sep 04 2022
web mar 4 2023 wind energy explained james f manwell 2010 09 14 wind energy s bestselling textbook fully revised this must have second edition includes up to date
data science for wind energy texas a m university - Jun 13 2023
web may 24 2019 data science for wind energy provides an in depth discussion on how data science methods can improve

decision making for wind energy applications near

data science for wind energy taylor francis ebooks refe - Sep 16 2023

web jun 7 2019 data science for wind energy provides an in depth discussion on how data science methods can improve decision making for wind energy applications near

storyteller 100 poem letters by morgan harper nichols - Jul 14 2023

web 11 books896 followers morgan harper nichols is an artist poet and musician who makes her work around people and their stories morgan spent the first few years of her adult

get pdf storyteller 100 poem letters full online yumpu - Feb 09 2023

web pdf download storyteller 100 poem letters ebook read online more info downloadsbook com 1979990522 download storyteller 100 poem letters read

buy storyteller 100 poem letters book online at low prices in - Sep 23 2021

browse editions for storyteller 100 poem letters the storygraph - Jan 08 2023

web current edition storyteller 100 poem letters morgan harper nichols 106 pages first pub 2017 isbn uid none format not specified language english publisher not

storyteller 100 poem letters paperback barnes noble - Mar 10 2023

web dec 5 2017 overview for over a decade many of the stories and poems i have written eventually turned into songs and for that i am grateful over the past year much of what i have written has turned into letters letters to people their

storyteller 100 poem letters english edition pdf pdf - Nov 25 2021

web buy storyteller 100 poem letters by morgan harper nichols online at alibris we have new and used copies available in 1 editions starting at 2 66 shop now

storyteller 100 poem letters paperback 5 december 2017 - Oct 05 2022

web dec 5 2017 storyteller 100 poem letters harper nichols morgan 9781979990523 kindle edition 0 00 this title and over 1 million more available with kindle unlimited

storyteller 100 poem letters kindle edition amazon in - Dec 27 2021

web mitch albom 2007 06 29 1 new york times bestseller a special 25th anniversary edition of the beloved book that changed millions of lives with a new afterword by the

storyteller 100 poem letters english edition kindle edition amazon de - Jul 02 2022

web storyteller 100 poem letters ebook harper nichols morgan amazon ca kindle store

storyteller 100 poem letters english edition full pdf rchat - Jan 28 2022

web storyteller 100 poem letters ebook harper nichols morgan amazon in kindle store
storyteller 100 poem letters english edition pdf uniport edu - Aug 03 2022
web storyteller 100 poem letters english edition ebook harper nichols morgan amazon de kindle store
e book download storyteller 100 poem letters for any - Dec 07 2022
web pdf download storyteller 100 poem letters ebook read online link read download and more info ebookstored com 1979990522 download storyteller
storyteller 100 poem letters amazon de - Feb 26 2022
web storyteller 100 poem letters english edition yeah reviewing a ebook storyteller 100 poem letters english edition could ensue your close connections listings this is just
storyteller 100 poem letters caipm - Apr 30 2022
web storyteller 100 poem letters morgan harper nichols download on z library z library download books for free find books
storyteller 100 poem letters paperback dec 5 2017 - Sep 04 2022
web may 27 2023 storyteller 100 poem letters english edition 2 10 downloaded from uniport edu ng on may 27 2023 by guest mr aesop s story shop bob hartman 2014 03
pdf epub storyteller 100 poem letters morgan harper free - May 12 2023
web this site currently has over a thousand free books available for download in various formats storyteller 100 poem letters best book storyteller 100 poem letters popular
storyteller 100 poem letters amazon com - Nov 06 2022
web paperback 22 70 2 used from 14 32 8 new from 15 27 for over a decade many of the stories and poems i have written eventually turned into songs and for that i am grateful
storyteller 100 poem letters kindle edition amazon ca - Jun 01 2022
web sep 14 2022 what you will find in this book is considered poetry they read as letters letters for people places things the seasons years for the story and for the storyteller
storyteller 100 poem letters kindle edition amazon com - Aug 15 2023
web nov 22 2017 storyteller 100 poem letters kindle edition by harper nichols morgan download it once and read it on your kindle device pc phones or tablets use features
storyteller 100 poem letters yumpu - Apr 11 2023
web feb 21 2022 storyteller 100 poem letters prior to now ive hardly ever had a enthusiasm about studying textbooks storyteller 100 poem letters the sole time that i
storyteller 100 poem letters morgan harper nichols download - Mar 30 2022

web storyteller 100 poem letters harper nichols morgan isbn 9781979990523 kostenloser versand für alle bücher mit versand und verkauf duch amazon

storyteller 100 poem letters paperback 5 dec 2017 - Jun 13 2023

web buy storyteller 100 poem letters by harper nichols morgan isbn 9781979990523 from amazon s book store everyday low prices and free delivery on eligible orders

storyteller 100 poem letters by morgan harper nichols alibris - Oct 25 2021

web amazon in buy storyteller 100 poem letters book online at best prices in india on amazon in read storyteller 100 poem letters book reviews author details and more at amazon in free delivery on qualified orders