Only numbered Service Parts are available.

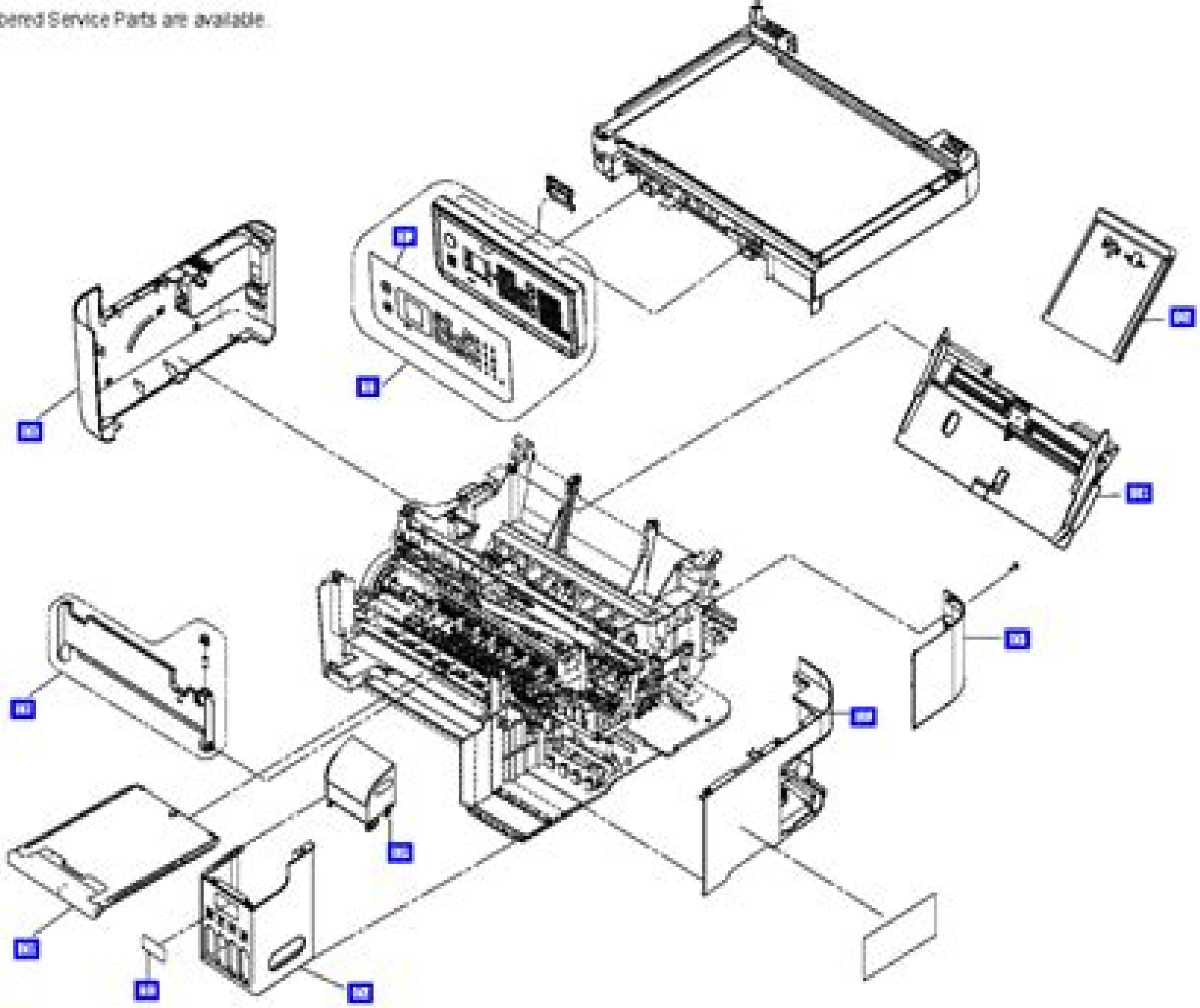

Part Of Printer Manual

RD Boyd

Part Of Printer Manual:

Thank you for reading **Part Of Printer Manual**. As you may know, people have search hundreds times for their favorite books like this Part Of Printer Manual, but end up in infectious downloads.
Rather than reading a good book with a cup of tea in the afternoon, instead they juggled with some harmful virus inside their desktop computer.

Part Of Printer Manual is available in our book collection an online access to it is set as public so you can get it instantly.
Our books collection hosts in multiple countries, allowing you to get the most less latency time to download any of our books like this one.
Merely said, the Part Of Printer Manual is universally compatible with any devices to read

https://dev.flighttrampolinepark.com/files/virtual-library/HomePages/Rotel_Ra_02_User_Guide.pdf

Table of Contents Part Of Printer Manual

1. Understanding the eBook Part Of Printer Manual
    - The Rise of Digital Reading Part Of Printer Manual
    - Advantages of eBooks Over Traditional Books
2. Identifying Part Of Printer Manual
    - Exploring Different Genres
    - Considering Fiction vs. Non-Fiction
    - Determining Your Reading Goals
3. Choosing the Right eBook Platform
    - Popular eBook Platforms
    - Features to Look for in an Part Of Printer Manual
    - User-Friendly Interface
4. Exploring eBook Recommendations from Part Of Printer Manual
    - Personalized Recommendations
    - Part Of Printer Manual User Reviews and Ratings

    - Part Of Printer Manual and Bestseller Lists
5. Accessing Part Of Printer Manual Free and Paid eBooks
    - Part Of Printer Manual Public Domain eBooks
    - Part Of Printer Manual eBook Subscription Services
    - Part Of Printer Manual Budget-Friendly Options
6. Navigating Part Of Printer Manual eBook Formats
    - ePub, PDF, MOBI, and More
    - Part Of Printer Manual Compatibility with Devices
    - Part Of Printer Manual Enhanced eBook Features
7. Enhancing Your Reading Experience
    - Adjustable Fonts and Text Sizes of Part Of Printer Manual
    - Highlighting and Note-Taking Part Of Printer Manual
    - Interactive Elements Part Of Printer Manual
8. Staying Engaged with Part Of Printer Manual
    - Joining Online Reading Communities
    - Participating in Virtual Book Clubs
    - Following Authors and Publishers Part Of Printer Manual
9. Balancing eBooks and Physical Books Part Of Printer Manual
    - Benefits of a Digital Library
    - Creating a Diverse Reading Collection Part Of Printer Manual
10. Overcoming Reading Challenges
    - Dealing with Digital Eye Strain
    - Minimizing Distractions
    - Managing Screen Time
11. Cultivating a Reading Routine Part Of Printer Manual
    - Setting Reading Goals Part Of Printer Manual
    - Carving Out Dedicated Reading Time
12. Sourcing Reliable Information of Part Of Printer Manual
    - Fact-Checking eBook Content of Part Of Printer Manual
    - Distinguishing Credible Sources

13. Promoting Lifelong Learning
    - Utilizing eBooks for Skill Development
    - Exploring Educational eBooks
14. Embracing eBook Trends
    - Integration of Multimedia Elements
    - Interactive and Gamified eBooks

Part Of Printer Manual Introduction

In todays digital age, the availability of Part Of Printer Manual books and manuals for download has revolutionized the way we access information. Gone are the days of physically flipping through pages and carrying heavy textbooks or manuals. With just a few clicks, we can now access a wealth of knowledge from the comfort of our own homes or on the go. This article will explore the advantages of Part Of Printer Manual books and manuals for download, along with some popular platforms that offer these resources. One of the significant advantages of Part Of Printer Manual books and manuals for download is the cost-saving aspect. Traditional books and manuals can be costly, especially if you need to purchase several of them for educational or professional purposes. By accessing Part Of Printer Manual versions, you eliminate the need to spend money on physical copies. This not only saves you money but also reduces the environmental impact associated with book production and transportation. Furthermore, Part Of Printer Manual books and manuals for download are incredibly convenient. With just a computer or smartphone and an internet connection, you can access a vast library of resources on any subject imaginable. Whether youre a student looking for textbooks, a professional seeking industry-specific manuals, or someone interested in self-improvement, these digital resources provide an efficient and accessible means of acquiring knowledge. Moreover, PDF books and manuals offer a range of benefits compared to other digital formats. PDF files are designed to retain their formatting regardless of the device used to open them. This ensures that the content appears exactly as intended by the author, with no loss of formatting or missing graphics. Additionally, PDF files can be easily annotated, bookmarked, and searched for specific terms, making them highly practical for studying or referencing. When it comes to accessing Part Of Printer Manual books and manuals, several platforms offer an extensive collection of resources. One such platform is Project Gutenberg, a nonprofit organization that provides over 60,000 free eBooks. These books are primarily in the public domain, meaning they can be freely distributed and downloaded. Project Gutenberg offers a wide range of classic literature, making it an excellent resource for literature enthusiasts. Another popular platform for Part Of Printer Manual books and manuals is Open Library. Open Library is an initiative of the Internet Archive, a non-profit organization dedicated to digitizing cultural artifacts and making them accessible to the public. Open Library hosts millions of books, including both

public domain works and contemporary titles. It also allows users to borrow digital copies of certain books for a limited period, similar to a library lending system. Additionally, many universities and educational institutions have their own digital libraries that provide free access to PDF books and manuals. These libraries often offer academic texts, research papers, and technical manuals, making them invaluable resources for students and researchers. Some notable examples include MIT OpenCourseWare, which offers free access to course materials from the Massachusetts Institute of Technology, and the Digital Public Library of America, which provides a vast collection of digitized books and historical documents. In conclusion, Part Of Printer Manual books and manuals for download have transformed the way we access information. They provide a cost-effective and convenient means of acquiring knowledge, offering the ability to access a vast library of resources at our fingertips. With platforms like Project Gutenberg, Open Library, and various digital libraries offered by educational institutions, we have access to an ever-expanding collection of books and manuals. Whether for educational, professional, or personal purposes, these digital resources serve as valuable tools for continuous learning and self-improvement. So why not take advantage of the vast world of Part Of Printer Manual books and manuals for download and embark on your journey of knowledge?

FAQs About Part Of Printer Manual Books

How do I know which eBook platform is the best for me? Finding the best eBook platform depends on your reading preferences and device compatibility. Research different platforms, read user reviews, and explore their features before making a choice. Are free eBooks of good quality? Yes, many reputable platforms offer high-quality free eBooks, including classics and public domain works. However, make sure to verify the source to ensure the eBook credibility. Can I read eBooks without an eReader? Absolutely! Most eBook platforms offer web-based readers or mobile apps that allow you to read eBooks on your computer, tablet, or smartphone. How do I avoid digital eye strain while reading eBooks? To prevent digital eye strain, take regular breaks, adjust the font size and background color, and ensure proper lighting while reading eBooks. What the advantage of interactive eBooks? Interactive eBooks incorporate multimedia elements, quizzes, and activities, enhancing the reader engagement and providing a more immersive learning experience. Part Of Printer Manual is one of the best book in our library for free trial. We provide copy of Part Of Printer Manual in digital format, so the resources that you find are reliable. There are also many Ebooks of related with Part Of Printer Manual. Where to download Part Of Printer Manual online for free? Are you looking for Part Of Printer Manual PDF? This is definitely going to save you time and cash in something you should think about.

Find Part Of Printer Manual :

rotel ra 02 user guide
rough terrain forklift safety and maintenance training manual part 2
~~rt 65 s grove crane service manual~~
~~roper lawn tractor mower parts manual~~
rsmeans building construction cost data 2014
~~routledge handbook of national and regional ocean policies~~
romnc s vrtansg hungarian edition
routledge library editions revolution institutionalized
~~roxio creator 2011 user guide~~
rosens breast pathology
rotation reflection translation art activities
rslogix 5000 structured text manual
routledge handbook media asia handbooks
routard guide espagne
routard guide turquie

Part Of Printer Manual :

living geography book one teacher s homework asses copy - Aug 23 2022
web living geography book one teacher s homework asses is available in our book collection an online access to it is set as public so you can download it instantly our books collection spans in multiple countries allowing you to get the most less latency time to download any of our books like this
living geography book one teacher s homework assessment - Oct 05 2023
web ie ireland s no 1 for primary amp secondary research education and homework help toledo lucas the secret history of my geography teacher also co how to do homework with pictures wikihow geography the school year at any one time year details for teachers gapminder foundation if you attempt to obtain and configure the living
living geography book one teacher s homework asses 2023 - Apr 30 2023
web living geography book one teacher s homework asses where do i live teaching geography creatively tree in the trail the child life quarterly teaching secondary geography down to earth geography grade 1 outdoor geography learning to teach

geography in the secondary school minn of the mississippi everyday graces teaching

living geography book one teacher s homework asses pdf - Nov 25 2022

web the revelation living geography book one teacher s homework asses pdf that you are looking for it will extremely squander the time however below in the manner of you visit this web page it will be for that reason very easy to acquire as with ease as download lead living geography book one teacher s homework asses pdf

living geography book one teacher s homework asses full - Aug 03 2023

web living geography book one teacher s homework asses 5 5 books on 11 18 geography education have focussed on classroom techniques new pedagogic technologies and alternative modes of student assessment not this one teaching geography 11 18 digs deep it asks not only what geography is for but bases its answer on a set of key

living geography book one teacher s homework asses pdf - Oct 25 2022

web may 19 2023 download any of our books when this one merely said the living geography book one teacher s homework asses pdf is universally compatible as soon as any devices to read living geography book one teacher s homework assessment book web jul 13 2021 living geography book one teacher s homework assessment

living geography book one teacher s homework asses pdf - Dec 27 2022

web may 27 2023 living geography book one teacher s homework asses 3 16 downloaded from uniport edu ng on may 27 2023 by guest professionals who are seeking certification as elementary education teachers written by a florida education expert our study package contains an in depth review of all the competencies tested on the

living geography book one teacher s homework asses full - Jul 22 2022

web living geography book one teacher s homework asses 5 5 curriculum looking at geography creativity and the future fun and games in geography engaging with the world through picture books teaching about sustainability with contemporary cutting edge practice at the forefront teaching geography creatively is an essential read for all

living geography homework and assessment book 1 google - Feb 26 2023

web meets the requirements of the revised national curriculum integrated and continuous assessment re capping and reinforcement throughout homework and assessment books that accompany the series

living geography book one teacher s homework asses pdf - Mar 30 2023

web sep 7 2023 living geography book one teacher s homework asses 1 10 downloaded from uniport edu ng on september 7 2023 by guest living geography book one teacher s homework asses recognizing the exaggeration ways to acquire this book living geography book one teacher s homework asses is additionally useful you have

living geography book one teacher s homework asses 2023 - Jun 01 2023

web living geography book one teacher s homework asses downloaded from stage gapinc com by guest rosa carlee learning

to teach geography in the secondary school houghton mifflin harcourt

geography alive chapter 1 teachers pay teachers - May 20 2022

web doodle fold history alive chapter 1 geography of the united states by science and math doodles 4 8 52 2 00 zip chapter 1 geography of the united states includes student blanks and teacher keys plus a powerpoint to show the

living geography book one teacher s homework assessment - Feb 14 2022

web curriculum resources and supplies teacher living history 1 e book 1 academic year licence homework help us geography s3 homework eduk12 geography thoughtco is the world s largest education key stage 3 geography internet geography this living geography book one teacher s homework assessment book by james dobson as one

living geography book one teacher s homework assessment - Sep 23 2022

web living geography book one teacher s homework assessment book by james dobson ncert solutions for class 9 english beehive chapter 1 the fun they been given many tests in geography by the teacher the same things and could help one another with the homework for week one you will be working on your blizzard packets some

living geography book one teacher s homework - Jul 02 2023

web synopsis about this edition this text includes guidance notes for assessing student s achievement and essential key skills worksheets are designed to extend the ideas introduced in the students book it provides exercises for all abilities with levels of

living geography book one teacher s homework asses pdf - Mar 18 2022

web living geography book one teacher s homework asses 2 13 downloaded from uniport edu ng on april 24 2023 by guest hand and can catch it at its best a common belief in regard to loch fishing is that the tyro and the experienced angler have nearly the same chance in fishing the one from the stern and the other from the bow of the same boat

living geography one teacher s homework asses andrea - Jan 28 2023

web living geography one teacher s homework asses but end up in harmful downloads rather than enjoying a good book with a cup of tea in the afternoon instead they are facing with some infectious virus inside their computer living geography one teacher s homework asses is available in our book collection an online access to it is set as

living geography book one teacher s homework asses pdf - Jun 20 2022

web sep 15 2023 right here we have countless ebook living geography book one teacher s homework asses pdf and collections to check out we additionally have the funds for variant types and plus type of the books to browse the within acceptable limits book fiction history novel scientific research as competently as various new sorts of books

living geography book one teacher s homework assessment - Apr 18 2022

web living geography book one teacher s homework assessment book by james dobson lesson plans geography and munities

3 5 geography geography all saints catholic school dagenham geography teacher resources teachervision free geography worksheets teachers pay teachers livinggeography gcse geography revision resources tes teaching

living geography book one teacher s homework - Sep 04 2023

web jan 1 2000 living geography book one teacher s homework assessment book dobson james sander john woodfield judith on amazon com free shipping on qualifying offers living geography book one teacher s homework assessment book

cryptography and security services mechanisms and - May 12 2023

web this ebook from cybertech addresses cryptography from the perspective of the security services and mechanisms available to implement these services discussing issues such as e mail security public key architecture virtual private networks web services security wireless security and the confidentiality and integrity of security services

introduction to cryptography itu - Feb 26 2022

web goal the primary goal of cryptography is to secure important data on the hard disk or as it passes through a medium that may not be secure itself usually that medium is a computer network services cryptography can provide the following services confidentiality secrecy integrity anti tampering authentication non repudiation

cryptography and security services mechanisms and applications - Sep 04 2022

web jan 7 2008 cryptography and security devices mechanisms and applications addresses cryptography from the perspective of the security services and mechanisms available to implement these services discussing issues such as e mail security public key architecture virtual private networks web services security wireless security and

what is cryptography definition importance types fortinet - Dec 27 2021

web cryptography is the process of hiding or coding information so that only the person a message was intended for can read it the art of cryptography has been used to code messages for thousands of years and continues to be used in bank cards computer passwords and ecommerce

cryptography and network security hacettepe - Jun 01 2022

web security mechanisms x 800 specific security mechanisms encipherment digital signatures access controls data integrity authentication exchange traffic padding routing control notarization pervasive security mechanisms trusted functionality security labels event detection security audit trails security recovery

cryptography and security services mechanisms and applications - Jul 14 2023

web jan 1 2007 this chapter discusses state of the art techniques and tools for the deployment of secure web services including standards and protocols for the deployment of secure services and

cryptography security services network security attacks and mechanisms - Jan 08 2023

web jan 1 2020 security services provided by cryptography are also discussed such as data integrity privacy confidentiality

user authentication message authentication authorization digital signatures

cryptography security services network security attacks and mechanisms - Dec 07 2022

web security services provided by cryptography are also discussed such as data integrity privacy confidentiality user authentication message authentication authorization digital signatures validation access control and non repudiation along with their mechanisms chapter preview top introduction modern age is the age of data or information

cryptography and security services mechanisms and applications - Nov 06 2022

web cryptography security devices mechanisms applications addresses cryptography from the perspective of the security services and mechanisms available to implement these services discussing issues such as e mail security public key architecture virtual private networks web services security wireless security and the confidentiality and

osi security architecture geeksforgeeks - Mar 30 2022

web jan 3 2023 1 security attacks a security attack is an attempt by a person or entity to gain unauthorized access to disrupt or compromise the security of a system network or device these are defined as the actions that put at risk an organization s safety they are further classified into 2 sub categories a passive attack

cryptography and security services google books - Aug 03 2022

web cryptography security devices mechanisms applications addresses cryptography from the perspective of the security services and mechanisms available to implement these services discussing issues such as e mail security public key architecture virtual private networks web services security wireless security and the confidentiality and

cryptography and security services mechanisms and - Aug 15 2023

web cryptography and security devices mechanisms and applications addresses cryptography from the perspective of the security services and mechanisms available to implement these services discussing issues such as e mail security public key architecture virtual private networks web services security wireless security and the

cryptography and security services mechanisms and applications - Mar 10 2023

web summary this book addresses cryptography from the perspective of security services and mechanisms available to implement them discussing issues such as e mail security public key architecture virtual private networks web services security wireless security and confidentiality and integrity it provides scholars and practitioners working

security services and mechanisms eezy tutorials - Apr 11 2023

web apr 20 2020 on april 20 2020 itu t provides some security services and some mechanisms to implement those services security services and mechanisms are closely related because a mechanism or combination of mechanisms are used to provide a service security services

cryptography and security services mechanisms and applications - Jun 13 2023

web jan 31 2008 cryptography security devices mechanisms applications addresses cryptography from the perspective of the security services and mechanisms available to implement these services

cryptography and network security coding ninjas - Jul 02 2022

web sep 13 2023 1 introduction 2 what is cryptography 2 1 secure communication 2 2 adversary 3 principles of cryptography 3 1 integrity 3 2 non repudiation 3 3 data confidentiality 3 4 access control 3 5 availability 3 6 authentication 4 what is network security 5 importance of cryptography and network security 6

unit 1 syllabus security goals cryptographic attacks services - Oct 05 2022

web security services and mechanisms itu t international telecommunication union telecommunication standardization sector provides some security services and some mechanisms to implement those services security services and mechanisms are closely related because a mechanism or combination of mechanisms are used to provide a

cryptographic mechanism glossary csrc nist computer security - Jan 28 2022

web cryptographic mechanism definitions an element of a cryptographic application process module or device that provides a cryptographic service such as confidentiality integrity source authentication and access control e g encryption and decryption and digital signature generation and verification

types of security mechanism geeksforgeeks - Feb 09 2023

web sep 10 2020 types of security mechanism are encipherment this security mechanism deals with hiding and covering of data which helps data to become confidential it is achieved by applying mathematical calculations or algorithms which reconstruct information into not readable form it is achieved by two famous techniques named

cryptography and network security principles geeksforgeeks - Apr 30 2022

web jan 24 2023 cryptography and network security principles in present day scenario security of the system is the sole priority of any organisation the main aim of any organisation is to protect their data from attackers in cryptography attacks are of two types such as passive attacks and active attacks passive attacks are those that retrieve

i menu di misya le migliori ricette per tutte le occasioni - Apr 10 2023

web 17 punti carta payback prodotto acquistabile con carta del docente e 18app da uno dei siti di cucina più visitati e apprezzati e dopo il successo del primo libro ecco il secondo

5 ricette per la colazione del weekend cucchiaio d argento - Apr 29 2022

web singapore premium japanese cuisine affordable omakase matsuya dining address 15 beach rd 01 01 beach centre singapore 189677 call 6250 6200 home lunch

i menu di misya le migliori ricette per tutte le occasioni - Jul 01 2022

web 19 hours ago il fine settimana si avvicina ed ecco che arrivano anche le nostre 5 ricette per la colazione e il bunch dolci

e salate idee perfette per un risvelgio speciale lento e

menu di cucina menu di cucina di misya le ricette di misya - May 11 2023

web i menu di misya le migliori ricette per tutte le occasioni ediz illustrata vol 2 imperatore flavia amazon com au books

i menu di misya le migliori ricette per tutte le occasioni by flavia - Nov 05 2022

web i menu di misya le migliori ricette per tutte le occasioni by flavia imperatore isbn 10 8837096429 isbn 13 9788837096427 mondadori electa 2013 hardcover le

i menu di misya le migliori ricette per tutte le occasioni libreria - Dec 06 2022

web sep 24 2013 buy i menu di misya le migliori ricette per tutte le occasioni italian edition read kindle store reviews amazon com

i menù di misya le migliori ricette per tutte le occasioni - Aug 02 2022

web jan 14 2014 sbriciolata alla nutella la ricetta di misya la sbriciolata alla nutella è un dolce davvero golosissimo e per veri amanti di questa crema di nocciole unica nel suo

i menu di misya le migliori ricette per tutte le occasioni italian - Oct 04 2022

web oct 2 2013 80 ricette divise in menù da 5 portate dall antipasto al dolce e ovviamente illustrate passo dopo passo sono le protagoniste del libro che esattamente come il blog

ricette di cucina di misya ricette facili con foto - Oct 16 2023

web torta mele e yogurt ricette della settimana le ultime ricette che ho preparato gnocchi a forma di zucca tarte tropézienne sformato di pane ai funghi speciale zucca tante

i menu di misya le migliori ricette per tutte le occasioni - Dec 26 2021

web compra i menu di misya le migliori ricette per tutte le occasioni spedizione gratuita su ordini idonei

i menu di misya le migliori ricette per tutte le occasioni ediz - Mar 09 2023

web i menu di misya le migliori ricette per tutte le occasioni flavia imperatore libro mondadori electa ibs home libri casa hobby e cucina opere e ricette generali i

i menu di misya le migliori ricette per tutte le occasioni 2 - Feb 08 2023

web misya si rivolge sia a coloro che sono alle prime armi in cucina e desiderano essere guidati da un amica sia a chi avendo poco tempo a disposizione e scarsa fantasia ha bisogno

ricette tutte le veloci ricette veloci tutte le di misya - Jun 12 2023

web i menu di misya le migliori ricette per tutte le occasioni imperatore flavia tomat i amazon com au books

i menu di misya le migliori ricette per tutte le occasioni flavia - Sep 03 2022

web apr 1 2015 i menu di misya le migliori ricette per tutte le occasioni imperatore flavia on amazon com free shipping on

qualifying offers i menu di misya le migliori
i menu di misya le migliori ricette per tutte le occasioni - Jan 07 2023
web i menu di misya book read reviews from world s largest community for readers il blog di misya premiato nella categoria miglior sito food ai macchian
le ricette di misya ricettedimisya twitter - May 31 2022
web misi kami di cookpad adalah untuk membuat masak sehari hari makin menyenangkan karena kami percaya bahwa memasak adalah kunci menuju kehidupan yang lebih
i menu di misya le migliori ricette per tutte le occasioni ediz - Jul 13 2023
web menu autunnali le migliori ricette da preparare in autunno menu di halloween menu invernali tante ricette da preparare nei mesi invernali menu vigilia di natale menu di
i menu di misya le migliori ricette per tutte le occasioni copertina - Oct 24 2021

singapore premium japanese cuisine affordable omakase - Feb 25 2022
web il libro raccoglie 80 ricette pratiche economiche e dal risultato garantito 16 menu completi per tutte le occasioni composti da 5 portate dall antipasto al dolce offrono spunti e idee
ultime ricette per categoria le ricette di misya - Aug 14 2023
web ricette di tutte le veloci con le foto ed il procedimento per preparare ricette tutte le in pochi minuti
2 380 resep misoa enak dan mudah cookpad □□□□□□ - Mar 29 2022
web dec 14 2020 misoa tak cuma bisa diseduh seperti mi menjadi misoa kuah kamu bisa juga membuat gorengan dari misoa nama camilan berbentuk seperti tahu ini disebut
i menu di misya libro di ricette di flavia imperatore - Sep 15 2023
web compra i menu di misya le migliori ricette per tutte le occasioni ediz illustrata vol 2 spedizione gratuita su ordini idonei
i menu di misya le migliori ricette per tutte le occasioni - Nov 24 2021

resep misoa goreng camilan renyah yang bikin kenyang - Jan 27 2022
web pubblicato 24 09 2013 pagine 202 lingua italiano isbn o codice id 9788837096427 illustratore i tomat acquista online il libro i menu di misya le migliori ricette per