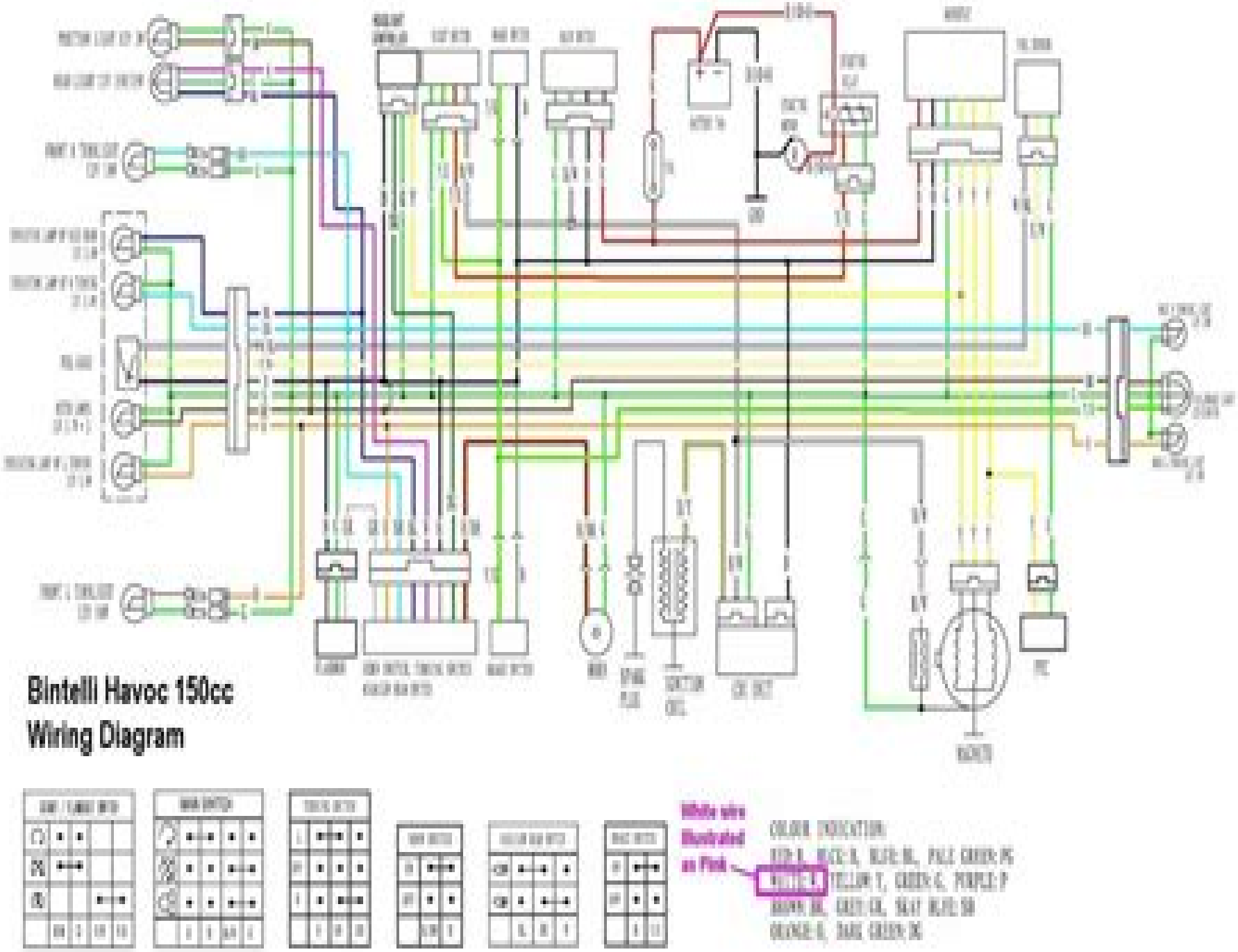

Bintelli Havoc 150cc Wiring Diagram

Scooter 150cc Electrical Manual

D Keegan

Scooter 150cc Electrical Manual:

Recognizing the showing off ways to acquire this book **Scooter 150cc Electrical Manual** is additionally useful. You have remained in right site to begin getting this info. get the Scooter 150cc Electrical Manual partner that we have enough money here and check out the link.

You could purchase lead Scooter 150cc Electrical Manual or get it as soon as feasible. You could speedily download this Scooter 150cc Electrical Manual after getting deal. So, when you require the books swiftly, you can straight get it. Its appropriately agreed easy and hence fats, isnt it? You have to favor to in this way of being

https://dev.flighttrampolinepark.com/book/browse/default.aspx/700%20Briggs%20And%20Stratton%20Repair%20Manual.pdf

Table of Contents Scooter 150cc Electrical Manual

1. Understanding the eBook Scooter 150cc Electrical Manual
    - The Rise of Digital Reading Scooter 150cc Electrical Manual
    - Advantages of eBooks Over Traditional Books
2. Identifying Scooter 150cc Electrical Manual
    - Exploring Different Genres
    - Considering Fiction vs. Non-Fiction
    - Determining Your Reading Goals
3. Choosing the Right eBook Platform
    - Popular eBook Platforms
    - Features to Look for in an Scooter 150cc Electrical Manual
    - User-Friendly Interface
4. Exploring eBook Recommendations from Scooter 150cc Electrical Manual
    - Personalized Recommendations
    - Scooter 150cc Electrical Manual User Reviews and Ratings
    - Scooter 150cc Electrical Manual and Bestseller Lists
5. Accessing Scooter 150cc Electrical Manual Free and Paid eBooks

- Scooter 150cc Electrical Manual Public Domain eBooks
- Scooter 150cc Electrical Manual eBook Subscription Services
- Scooter 150cc Electrical Manual Budget-Friendly Options

6. Navigating Scooter 150cc Electrical Manual eBook Formats
   - ePub, PDF, MOBI, and More
   - Scooter 150cc Electrical Manual Compatibility with Devices
   - Scooter 150cc Electrical Manual Enhanced eBook Features
7. Enhancing Your Reading Experience
   - Adjustable Fonts and Text Sizes of Scooter 150cc Electrical Manual
   - Highlighting and Note-Taking Scooter 150cc Electrical Manual
   - Interactive Elements Scooter 150cc Electrical Manual
8. Staying Engaged with Scooter 150cc Electrical Manual
   - Joining Online Reading Communities
   - Participating in Virtual Book Clubs
   - Following Authors and Publishers Scooter 150cc Electrical Manual
9. Balancing eBooks and Physical Books Scooter 150cc Electrical Manual
   - Benefits of a Digital Library
   - Creating a Diverse Reading Collection Scooter 150cc Electrical Manual
10. Overcoming Reading Challenges
    - Dealing with Digital Eye Strain
    - Minimizing Distractions
    - Managing Screen Time
11. Cultivating a Reading Routine Scooter 150cc Electrical Manual
    - Setting Reading Goals Scooter 150cc Electrical Manual
    - Carving Out Dedicated Reading Time
12. Sourcing Reliable Information of Scooter 150cc Electrical Manual
    - Fact-Checking eBook Content of Scooter 150cc Electrical Manual
    - Distinguishing Credible Sources
13. Promoting Lifelong Learning
    - Utilizing eBooks for Skill Development

    - Exploring Educational eBooks
14. Embracing eBook Trends
    - Integration of Multimedia Elements
    - Interactive and Gamified eBooks

Scooter 150cc Electrical Manual Introduction

In the digital age, access to information has become easier than ever before. The ability to download Scooter 150cc Electrical Manual has revolutionized the way we consume written content. Whether you are a student looking for course material, an avid reader searching for your next favorite book, or a professional seeking research papers, the option to download Scooter 150cc Electrical Manual has opened up a world of possibilities. Downloading Scooter 150cc Electrical Manual provides numerous advantages over physical copies of books and documents. Firstly, it is incredibly convenient. Gone are the days of carrying around heavy textbooks or bulky folders filled with papers. With the click of a button, you can gain immediate access to valuable resources on any device. This convenience allows for efficient studying, researching, and reading on the go. Moreover, the cost-effective nature of downloading Scooter 150cc Electrical Manual has democratized knowledge. Traditional books and academic journals can be expensive, making it difficult for individuals with limited financial resources to access information. By offering free PDF downloads, publishers and authors are enabling a wider audience to benefit from their work. This inclusivity promotes equal opportunities for learning and personal growth. There are numerous websites and platforms where individuals can download Scooter 150cc Electrical Manual. These websites range from academic databases offering research papers and journals to online libraries with an expansive collection of books from various genres. Many authors and publishers also upload their work to specific websites, granting readers access to their content without any charge. These platforms not only provide access to existing literature but also serve as an excellent platform for undiscovered authors to share their work with the world. However, it is essential to be cautious while downloading Scooter 150cc Electrical Manual. Some websites may offer pirated or illegally obtained copies of copyrighted material. Engaging in such activities not only violates copyright laws but also undermines the efforts of authors, publishers, and researchers. To ensure ethical downloading, it is advisable to utilize reputable websites that prioritize the legal distribution of content. When downloading Scooter 150cc Electrical Manual, users should also consider the potential security risks associated with online platforms. Malicious actors may exploit vulnerabilities in unprotected websites to distribute malware or steal personal information. To protect themselves, individuals should ensure their devices have reliable antivirus software installed and validate the legitimacy of the websites they are downloading from. In conclusion, the ability to download Scooter 150cc Electrical Manual has transformed the way we access information. With the convenience, cost-effectiveness, and accessibility

it offers, free PDF downloads have become a popular choice for students, researchers, and book lovers worldwide. However, it is crucial to engage in ethical downloading practices and prioritize personal security when utilizing online platforms. By doing so, individuals can make the most of the vast array of free PDF resources available and embark on a journey of continuous learning and intellectual growth.

FAQs About Scooter 150cc Electrical Manual Books

1. Where can I buy Scooter 150cc Electrical Manual books? Bookstores: Physical bookstores like Barnes & Noble, Waterstones, and independent local stores. Online Retailers: Amazon, Book Depository, and various online bookstores offer a wide range of books in physical and digital formats.
2. What are the different book formats available? Hardcover: Sturdy and durable, usually more expensive. Paperback: Cheaper, lighter, and more portable than hardcovers. E-books: Digital books available for e-readers like Kindle or software like Apple Books, Kindle, and Google Play Books.
3. How do I choose a Scooter 150cc Electrical Manual book to read? Genres: Consider the genre you enjoy (fiction, non-fiction, mystery, sci-fi, etc.). Recommendations: Ask friends, join book clubs, or explore online reviews and recommendations. Author: If you like a particular author, you might enjoy more of their work.
4. How do I take care of Scooter 150cc Electrical Manual books? Storage: Keep them away from direct sunlight and in a dry environment. Handling: Avoid folding pages, use bookmarks, and handle them with clean hands. Cleaning: Gently dust the covers and pages occasionally.
5. Can I borrow books without buying them? Public Libraries: Local libraries offer a wide range of books for borrowing. Book Swaps: Community book exchanges or online platforms where people exchange books.
6. How can I track my reading progress or manage my book collection? Book Tracking Apps: Goodreads, LibraryThing, and Book Catalogue are popular apps for tracking your reading progress and managing book collections. Spreadsheets: You can create your own spreadsheet to track books read, ratings, and other details.
7. What are Scooter 150cc Electrical Manual audiobooks, and where can I find them? Audiobooks: Audio recordings of books, perfect for listening while commuting or multitasking. Platforms: Audible, LibriVox, and Google Play Books offer a wide selection of audiobooks.
8. How do I support authors or the book industry? Buy Books: Purchase books from authors or independent bookstores. Reviews: Leave reviews on platforms like Goodreads or Amazon. Promotion: Share your favorite books on social media

or recommend them to friends.

9. Are there book clubs or reading communities I can join? Local Clubs: Check for local book clubs in libraries or community centers. Online Communities: Platforms like Goodreads have virtual book clubs and discussion groups.
10. Can I read Scooter 150cc Electrical Manual books for free? Public Domain Books: Many classic books are available for free as theyre in the public domain. Free E-books: Some websites offer free e-books legally, like Project Gutenberg or Open Library.

Find Scooter 150cc Electrical Manual :

~~700 briggs and stratton repair manual~~
manual boat winch installation
les cowsboys du sexas calamity jayne
~~12 3 hess s law answers pg 20~~
naufrags dythaq 13 glebe singulire
envy the seven deadly sins
read new era accounting grade 1learners solution
aquarupella 2016 mila marquis
~~earth science if8755 answer key~~
onity edht22i operation manual
voltas ac guide
honestys hostage
~~2001 holden statesman workshop manual~~
1996 seville service and repair manual
mercruiser alpha one carburetor diagram

Scooter 150cc Electrical Manual :

le document le plus complet du marché camping car magazine - Feb 26 2022
web jan 17 2022 ce document de 66 pages découpe la france en 15 cartes mentionnant l emplacement des aires de services cet atlas des aires de services qui recense 5750 étapes est aussi l ouvrage le plus complet que vous pouvez trouver actuellement

le guide officiel aires de service camping car edition 2022 - Apr 11 2023
web feb 3 2022 le guide officiel aires de service camping car edition 2022 paperback illustrated 3 feb 2022 french edition by linda salem author 122 ratings see all formats and editions paperback 8 00 3 used from 5 14 le seul guide officiel du marché qui répertorie l ensemble des aires de services
indispensable le guide 2021 des aires de services est en vente - Mar 30 2022
web feb 11 2021 pour vos sorties en camping car trouvez vos étapes sereinement grâce au guide officiel des aires de services camping car l édition 2021 est actualisée et enrichie de nouvelles adresses pour vous faire voyager en france mais aussi en europe
le guide officiel 2022 des aires de services en camping car est - Aug 15 2023
web feb 2 2022 cette édition 2022 répertorie pas moins de 6 245 étapes camping car en france ou en europe allemagne espagne italie suisse grâce à son atlas routier vous pourrez également localiser plus facilement des aires
le guide officiel aires de services camping car cultura - Jan 08 2023
web le seul guide officiel du marché qui répertorie l ensemble des aires de services aires communales aires privées campings aires de stationnement en france et en europe allemagne espagne italie et suisse près de 7 000 étapes touristiques en france et en europe présentées avec les services proposés et les tarifs 5700 coordonnées gps
le guide officiel des aires de services camping car toutes les aires - Jan 28 2022
web feb 12 2015 n 1 des guides pour les camping caristes pour son édition 2015 le guide officiel des aires de services camping car recense 6 500 étapes touristiques en france et en europe où l accueil des camping cars est favorisé
aires de services et de stationnement camping car magazine - May 12 2023
web retrouvez plus de 7615 aires en france et en europe planifiez toutes vos étapes avec le guide officiel des aires de services et des aires de stationnement de camping car magazine partenaire de la ffcc
guide officiel aires de services camping car just4camper fr - Feb 09 2023
web le guide officiel des aires de services pour camping car édition 2021 regroupe l ensemble des aires de services pour camping caristes en france et quelques aires européennes également le guide répertorie toutes les informations utiles comme les services proposés et les tarifs de chaque aire ainsi que les coordonnées gps des aires
toutes les étapes 100 camping car le guide national des aires de - Mar 10 2023
web le guide national des aires de services est une référence pour tous les camping caristes il réunit toutes les étapes délivrant au minimum les services de vidanges et plein d eau et souvent le stationnement un guide en papier pratique et indispensable pour réussir vos voyages en camping car ou fourgon aménagé la suite aprÈs cette
le guide officiel aires de service camping car 2020 broché - Oct 05 2022

web le guide officiel aires de service camping car 2020 broché livre grand format 6 février 2020 le seul guide officiel du marché qui répertorie l ensemble des aires de services près de 7 000 étapes touristiques en france et en europe présentées avec les services proposés et les tarifs 5700 coordonnées gps

le guide officiel aires de services camping car amazon fr - Jun 01 2022

web ce guide est complet pour tout savoir sur les aires de repos disponibles sur le territoire français aires communales gratuites ou payantes coordonnées gps de chaque aire incluses

guide des aires de services camping car 2023 boutique ffcc - Sep 04 2022

web ce guide répertorie toutes les aires de services pour camping car soit 6 245 étapes en france et en europe allemagne espagne italie et suisse comprenant plus de 5 720 lieux en france ils sont localisés sur une carte routière et identifiés par type d aire aires gérées par une commune aires gérées par un établissement privé

guide officiel aires de services camping car 2023 broché - Dec 07 2022

web guide officiel aires de services camping car 2023 azaiez mariam amazon fr jeux vidéo jeux vidéo playstation 4 accessoires livraison prioritaire profitez de tous les avantages de livraison en vous inscrivant à prime neuf 10 50 tous les prix incluent la tva retours gratuits livraison à 0 01 samedi 9 septembre détails

guide officiel des aires de services camping car guides - Jun 13 2023

web jul 26 2023 Édition 2023 À votre service 404 pages 10 50 ce guide unique en europe recense plus de 6 350 étapes techniques dédiées aux camping cars en france et en europe dont 5 750 étapes françaises avec coordonnées gps indispensable pour une pratique libre et citoyenne

guide national des aires de services camping car 2023 - Apr 30 2022

web le guide national des aires de services camping cars en chiffres 3800 c est le nombre d étapes référencées cette année avec coordonnées gps 2119 nombre d aires municipales 1250 nombre d aires totalement gratuites 3136 nombre d aires autorisant le

le guide officiel aires de services camping car fnac - Nov 06 2022

web feb 11 2021 le guide officiel aires de services camping car linda salem regicamp des milliers de livres avec la livraison chez vous en 1 jour ou en magasin avec 5 de réduction le guide officiel aires de services camping car broché linda salem achat livre fnac

le guide officiel des aires de services camping car 2020 est - Jul 02 2022

web jan 22 2020 recommandé par la fédération française des campeurs caravaniers et camping caristes ffcc le guide officiel des aires de services collection 2020 recense 6 420 étapes en france et en europe allemagne suisse italie et espagne ses 436 pages vous indiquent aussi bien les aires communales que les aires privées et les

le guide officiel aires de service camping car edition 2022 - Jul 14 2023
web le seul guide officiel du marché qui répertorie l ensemble des aires de services aires communales aires privées campings aires de stationnement en france et à l etranger allemagne espagne italie et suisse près de 7 000 étapes touristiques en france et en europe présentées avec les services proposés et les tarifs
le guide officiel aires de service camping car 2020 - Dec 27 2021
web le guide officiel aires de service camping car 2020 duparc martine amazon com tr kitap
guide national des aires de service camping car 2023 broché le - Aug 03 2022
web l incontournable guide des aires de camping car avec la revue le monde du camping car4000 étapes en france publiées par le guide national des aires de services avec cette année plus de 1200 aires totalement gratuites
graad 10 lewenswetenskappe junie eksamen memo 2023 - Feb 09 2023
web hierdie produk bestaan uit n aflaaibare graad 10 lewenswetenskappe junie eksamen memo die vraestel bestaan uit 16 bladsye vir 150 punte kontak ons vir meer informasie
via afrika lewenswetenskappe - Jul 02 2022
web graad 10 studiegids m bowie a johannes r mhlongo e pretorius graad 10 onderwysersgids via afrika lewenswetenskappe via afrika verstaan en waardeer jou
gr 10 lewenswetenskappe formele assessering 3 2022 - Jan 28 2022
web aug 1 2022 gr 10 lewenswetenskappe formele assessering 3 2022 kwartaal 3 totaal 60 punte tydsduur 1 uur pdf dokument gereed om te druk en uit te gee
cambridge university press assessment - Feb 26 2022
web cambridge university press assessment
lewenswetenskappe graad 10 november eksamen pnhs - Apr 30 2022
web lewenswetenskappe graad 10 november eksamen vraestel 1 kwartaal 2 3 1 chemie van lewe anorganiese en organiese verbindings 2 selle en seldeling
graad 10 lewenswetenskappe ander e classroom - Apr 11 2023
web grade graad 10 vakke lewenswetenskappe ander eksamenvraestelle hersiening kwartaal 2 junie proefeksamenvraestel 2017 werksvel kwartaal 2 junie
junie vraestelle summaries sa - Dec 07 2022
web graad 10 junie eksamen vraestelle en memorandums 2023 r 805 00 r 480 00 incl vat graad 10 lewenswetenskappe june toets en memo 2023 3 r 45 00 incl vat graad
life sciences grade 10 exam past papers and memos pdf - Nov 25 2021

web nov 4 2018 life sciences grade 10 controlled tests and exam question papers notes and study guides 2023 2022 2021 2020 hello life sciences grade 10 learner on

graad 10 lewenswetenskappe maart toets en memo 2023 - Oct 25 2021

web hierdie produk bestaan uit n lewenswetenskappe vraestel en memo vir graad 10 leerders vir die maart toets reeks die vraestel bestaan uit 7 bladsye wat 50 punte tel

lewenswetenskappe graad 10 vraestelle - Dec 27 2021

web lewens wetenskappe graad 10 vraestelle junie eksamen youtube lewenswetenskap pnhs lewenswetenskappe as prentjievak graad 10 amaniyah graad 10

graad 10 hoërskool brandwag - Jan 08 2023

web gr10 lewenswetenskap eksamen junie 2018 gr10 lewenswetenskap eksamen junie 2018 memo lewensoriËntering gr10 lewensoriëntering vraestel

graad 10 lewenswetenskappe junie eksamen memo 2023 - Sep 04 2022

web hierdie produk bestaan uit n aflaaibare graad 10 lewenswetenskappe junie eksamen memo die vraestel bestaan uit 16 bladsye vir 150 punte graad 10 lewenswetenskappe

graad 10 lewenswetenskappe maart toets en memo 2023 2 - Jun 01 2022

web hierdie produk bestaan uit n lewenswetenskappe vraestel en memo vir graad 10 leerders vir die maart toets reeks die vraestel bestaan uit 5 bladsye wat 50 punte tel

graad 10 lewenswetenskappe vraestel en memo litnet - Jun 13 2023

web feb 28 2023 die vraestelle is ingedeel volgens graad en vakgebied dit dek onlangse inhoud soos behandel in die kabv kurrikulum die vraestelle is nie ingedeel volgens n

provinsiale assessering graad 10 north west - Jul 14 2023

web lewenswetenskappe v1 nss graad 10 nw november 2019 kopiereg voorbehou blaai om asseblief afdeling a vraag 1 1 1 verskillende opsies word as moontlike

graad 10 junie eksamen vraestelle en memorandums 2023 - Oct 05 2022

web graad 10 lewenswetenskappe junie eksamen memo 2023 hierdie produk bestaan uit n aflaaibare graad 10 lewenswetenskappe junie eksamen memo die vraestel

graad 10 lewenswetenskappe junie eksamen memo 2023 - Aug 03 2022

web graad 10 lewenswetenskappe junie eksamen memo 2023 hierdie produk bestaan uit n aflaaibare graad 10 lewenswetenskappe junie eksamen memo die vraestel

graad 10 lewensoriëntering junie eksamen 2019 pnhs - Mar 10 2023

web graad 10 lewensoriëntering junie eksamen 2019 eksamenafbakening gebruik aantekeninge en handboek bladsynommers soos aangedui as verwysing

lewenswetenskappe graad 10 kwartaal 2 junie - May 12 2023

web graad 10 kwartaal 2 lewenswetenskappe junie proefeksamenvraestel 2017 memo afdeling a vraag 1 1 1 verskeie opsies word gegee as moontlike

graad 10 junie eksamen vraestelle en memorandums 2023 - Nov 06 2022

web may 25 2023 hierdie produk bevat die volgende vraestelle met memorandums vir die junie eksamens afrikaans ht 2023 x2 english fal 2023 x1 wiskunde 2023 x2

gr 10 lewenswetenskappe formele assessering 1 2022 - Mar 30 2022

web aug 1 2022 gr 10 lewenswetenskappe formele assessering 1 2022 kwartaal 1 totaal 60 punte tydsduur 1 uur pdf dokument gereed om te druk en uit te gee

nss mei junie 2021 lewenswetenskappe v1 wced eportal - Aug 15 2023

web feb 21 2022 hier is lewenswetenskappe vraestel 1 vir mei junie 2021 gebruik gerus as voorbereiding vir die rekord en finale eksamen nss mei junie 2021

nss nov 2021 lewenswetenskappe v2 wced eportal - Sep 23 2021

web mar 10 2022 hier is lewenswetenskappe vraestel 2 vir november 2021 gebruik gerus as voorbereiding vir die rekord en finale eksamen

this is for real by james hadley chase goodreads - Oct 28 2022

web james hadley chase 3 75 263 ratings23 reviews when a woman turns up in paris with information to sell to the cia is it for real it soon becomes clear that it is and the cia aren t the only ones to realize it

james hadley chase book series in order - Jul 05 2023

web hardcover paperback kindle james hadley chase was an english author and he was one of the best known thriller writers of all time he was born rene lodge brabazon raymond on december 24 1906 and died on february 6 1985 at the age of 78 years he wrote in the detective crime fiction mystery and thriller genres

james hadley chase books page 1 world of books - May 23 2022

web 1 2 twelve chinamen and a woman by james hadley chase new 15 29 add to cart like a hole in the head by james hadley chase very good 9 00

james hadley chase author of no orchids for miss blandish goodreads - Mar 01 2023

web james hadley chase s books average rating 3 76 32 221 ratings 2 281 reviews 475 distinct works similar authors more books by james hadley chase series by james hadley chase tom lepski 15 books by james hadley chase 3 76 avg rating 4 363

ratings blandish s orchids and dave fenner 3 books by james hadley chase

james hadley chase fantastic fiction - Jul 25 2022

web author james hadley chase s complete list of books and series in order with the latest releases covers descriptions and availability

james hadley chase books goodreads - Jun 04 2023

web books shelved as james hadley chase no orchids for miss blandish by james hadley chase a coffin from hong kong by james hadley chase tiger by the tail

eve chase novel wikipedia - Sep 26 2022

web eve is a 1945 psychological thriller novel by british writer james hadley chase the novel was made into a film titled eva by joseph losey starring stanley baker and jeanne moreau 1 it was also made into a 2018 french film starring isabelle huppert 2

books by james hadley chase goodreads - Oct 08 2023

web james hadley chase has 479 books on goodreads with 106098 ratings james hadley chase s most popular book is no orchids for miss blandish blandish s orc

james hadley chase wikipedia - Aug 06 2023

web james hadley chase 24 december 1906 6 february 1985 was an english writer while his birth name was rené lodge brabazon raymond he was well known by his various pseudonyms including james hadley chase james l docherty raymond marshall r raymond and ambrose grant

5 best james hadley chase books definitive ranking - Mar 21 2022

web the vulture is a patient bird james hadley chase appears in 2 articles view on amazon 3 no orchids for miss blandish james hadley chase appears in 2 articles view on amazon 4 an ace up my sleeve james hadley chase appears in 2 articles view on amazon 5 a coffin from hong kong james hadley chase appears in 2 articles view on amazon

list of books by author james hadley chase thriftbooks - Aug 26 2022

web looking for books by james hadley chase see all books authored by james hadley chase including no orchids for miss blandish and i ll bury my dead and more on thriftbooks com

discover the jaw dropping best books by james hadley chase - Apr 21 2022

web may 1 2023 discover the thrilling world of james hadley chase s best books from classic noir to pulse pounding suspense these stories will keep you on the edge of your seat don t miss out on this must read collection from one of

james hadley chase book list fictiondb - Nov 28 2022

web newest release bibliography 73 books first book january 1939 latest book january 1984 author rating about the author

rené lodge brabazon raymond was born on 24th december 1906 in london england the son of colonel francis raymond of the colonial indian army a veterinary surgeon

all book series by james hadley chase goodreads - May 03 2023

web james hadley chase 3 73 avg rating 616 ratings james hadley chase has 471 books on goodreads with 105761 ratings james hadley chase s most popular series is tom lepski

category novels by james hadley chase wikipedia - Apr 02 2023

web the dead stay dumb e eve chase novel f the fast buck the flesh of the orchid novel g the guilty are afraid i i ll bury my dead i ll get you for this novel j just a matter of time novel l like a hole in the head a lotus for miss quon m mallory novel my laugh comes last n no business of mine no orchids for miss blandish novel s

james hadley chase open library - Jan 31 2023

web he wrote as r raymond james hadley chase james l docherty ambrose grant and raymond marshall during world war ii he served in the royal air force achieving the rank of squadron leader chase edited the raf journal with david langdon and had several stories from it published after the war in the book slipstream a royal air force anthology

tom lepski series by james hadley chase goodreads - Dec 30 2022

web hit them where it hurts by james hadley chase 3 69 284 ratings 17 reviews published 1984 20 editions somebody is blackmailing mrs thorsen s daughter an want to read rate it the soft centre the way the cookie crumbles well now my pretty ear to the ground there s a hippie on the highway like a hole in the head want to

category films based on works by james hadley chase - Feb 17 2022

web pages in category films based on works by james hadley chase the following 30 pages are in this category out of 30 total this list may not reflect recent changes

order of james hadley chase books orderofbooks com - Jun 23 2022

web order of james hadley chase books james hadley chase 1906 1985 was an english author of mystery suspense and romance novels he wrote the steve harmas frank terrell and mark girland series chase was born to a veterinary surgeon and indian army colonel who intended him to pursue science

all book series by james hadley chase goodreads - Sep 07 2023

web james hadley chase 3 72 avg rating 617 ratings james hadley chase has 476 books on goodreads with 106061 ratings james hadley chase s most popular series is tom lepski