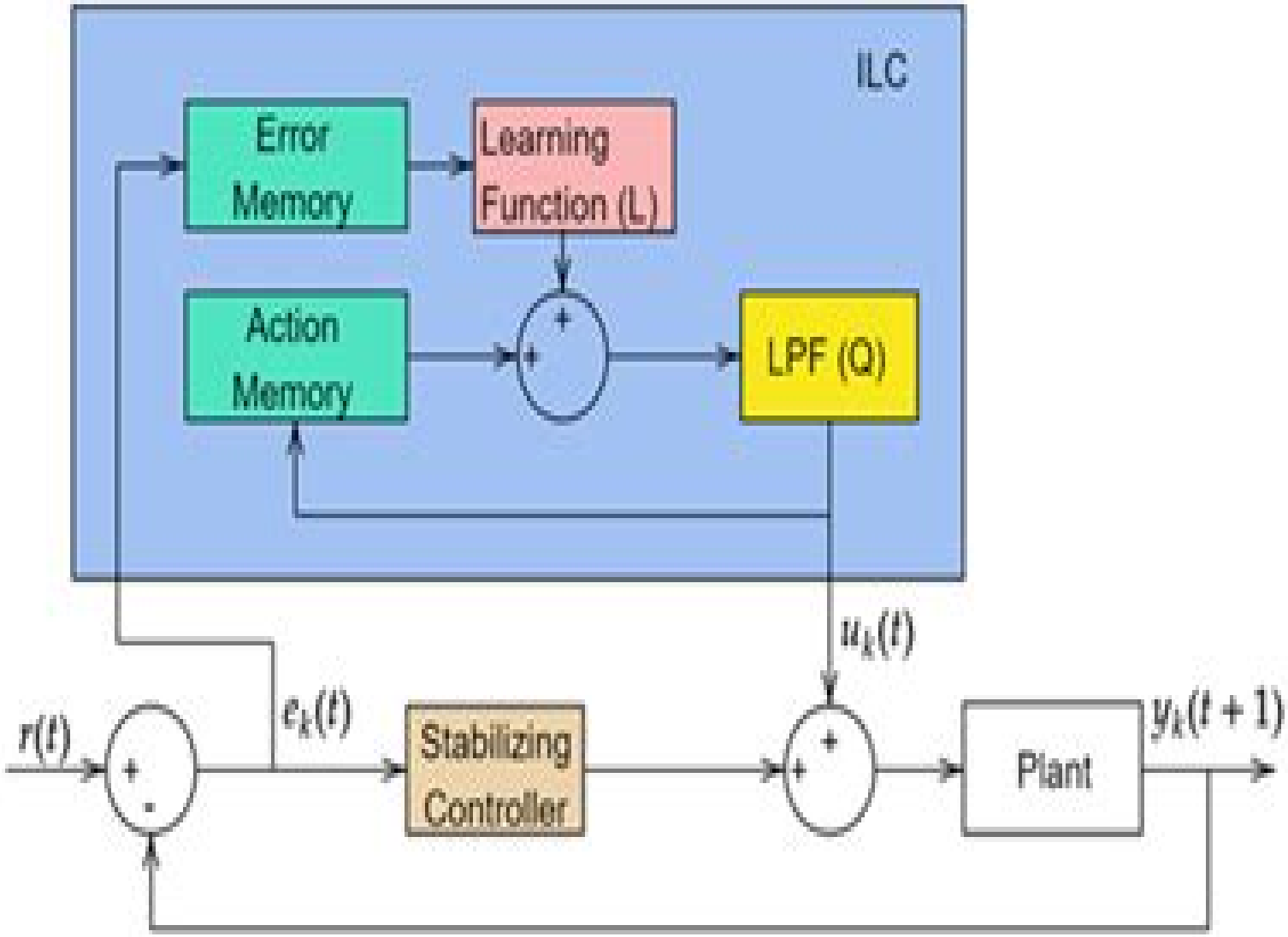
ILC
Error Memory
Learning Function (L)
Action Memory
LPF (Q)
$u_k(t)$
$r(t)$
$e_k(t)$
Stabilizing Controller
Plant
$y_k(t+1)$

Iterative Learning Control Convergence Robustneb And Applications

Lei Shi

Iterative Learning Control Convergence Robustneb And Applications:

Iterative Learning Control Yangquan Chen,Changyun Wen,2007-10-03 This book provides readers with a comprehensive coverage of iterative learning control The book can be used as a text or reference for a course at graduate level and is also suitable for self study and for industry oriented courses of continuing education Ranging from aerodynamic curve identification robotics to functional neuromuscular stimulation Iterative Learning Control ILC started in the early 80s is found to have wide applications in practice Generally a system under control may have uncertainties in its dynamic model and its environment One attractive point in ILC lies in the utilisation of the system repetitiveness to reduce such uncertainties and in turn to improve the control performance by operating the system repeatedly This monograph emphasises both theoretical and practical aspects of ILC It provides some recent developments in ILC convergence and robustness analysis The book also considers issues in ILC design Several practical applications are presented to illustrate the effectiveness of ILC The applied examples provided in this monograph are particularly beneficial to readers who wish to capitalise the system repetitiveness to improve system control performance Iterative Learning Control Yangquan Chen,Changyun Wen,1999-09-22 This book provides readers with a comprehensive coverage of iterative learning control The book can be used as a text or reference for a course at graduate level and is also suitable for self study and for industry oriented courses of continuing education Ranging from aerodynamic curve identification robotics to functional neuromuscular stimulation Iterative Learning Control ILC started in the early 80s is found to have wide applications in practice Generally a system under control may have uncertainties in its dynamic model and its environment One attractive point in ILC lies in the utilisation of the system repetitiveness to reduce such uncertainties and in turn to improve the control performance by operating the system repeatedly This monograph emphasises both theoretical and practical aspects of ILC It provides some recent developments in ILC convergence and robustness analysis The book also considers issues in ILC design Several practical applications are presented to illustrate the effectiveness of ILC The applied examples provided in this monograph are particularly beneficial to readers who wish to capitalise the system repetitiveness to improve system control performance High-order Iterative Learning Control Yangquan Chen,1997 *Iterative Learning Control* Hyo-Sung Ahn,Kevin L. Moore,YangQuan Chen,2007-06-28 This monograph studies the design of robust monotonically convergent it ative learning controllers for discrete time systems Iterative learning control ILC is well recognized as an e cient method that o ers signi cant p formance improvement for systems that operate in an iterative or repetitive fashion e g robot arms in manufacturing or batch processes in an industrial setting Though the fundamentals of ILC design have been well addressed in the literature two key problems have been the subject of continuing search activity First many ILC design strategies assume nominal knowledge of the system to be controlled Only recently has a comprehensive approach to robust ILC analysis and design been established to handle the situation where the plant model is uncertain Second it is well known that many

ILC algorithms do not produce monotonic convergence though in applications monotonic convergencecan be essential This monograph addresses these two keyproblems by providingauni ed analysisanddesignframeworkforrobust monotonically convergent ILC The particular approach used throughout is to consider ILC design in the iteration domain rather than in the time domain Using a lifting technique the two dimensionalILC system whichhas dynamics in both the time and erationdomains istransformedintoaone dimensionalsystem withdynamics only in the iteration domain The so called super vector framework resulting from this transformation is used to analyze both robustness and monotonic convergence for typical uncertainty models including parametric interval certainties frequency like uncertainty in the iteration domain and iterati domain stochastic uncertainty **Iterative Learning Control** Zeungnam Bien,Jian-Xin Xu,2012-12-06 Iterative Learning Control ILC differs from most existing control methods in the sense that it exploits every possibility to incorporate past control informa tion such as tracking errors and control input signals into the construction of the present control action There are two phases in Iterative Learning Control first the long term memory components are used to store past control infor mation then the stored control information is fused in a certain manner so as to ensure that the system meets control specifications such as convergence robustness etc It is worth pointing out that those control specifications may not be easily satisfied by other control methods as they require more prior knowledge of the process in the stage of the controller design ILC requires much less information of the system variations to yield the desired dynamic be haviors Due to its simplicity and effectiveness ILC has received considerable attention and applications in many areas for the past one and half decades Most contributions have been focused on developing new ILC algorithms with property analysis Since 1992 the research in ILC has progressed by leaps and bounds On one hand substantial work has been conducted and reported in the core area of developing and analyzing new ILC algorithms On the other hand researchers have realized that integration of ILC with other control techniques may give rise to better controllers that exhibit desired performance which is impossible by any individual approach *Robust and Fault-Tolerant Control* Krzysztof Patan,2019-03-16 Robust and Fault Tolerant Control proposes novel automatic control strategies for nonlinear systems developed by means of artificial neural networks and pays special attention to robust and fault tolerant approaches The book discusses robustness and fault tolerance in the context of model predictive control fault accommodation and reconfiguration and iterative learning control strategies Expanding on its theoretical deliberations the monograph includes many case studies demonstrating how the proposed approaches work in practice The most important features of the book include a comprehensive review of neural network architectures with possible applications in system modelling and control a concise introduction to robust and fault tolerant control step by step presentation of the control approaches proposed an abundance of case studies illustrating the important steps in designing robust and fault tolerant control and a large number of figures and tables facilitating the performance analysis of the control approaches described The material presented in this book will be useful for researchers and engineers who wish to avoid

spending excessive time in searching neural network based control solutions It is written for electrical computer science and automatic control engineers interested in control theory and their applications This monograph will also interest postgraduate students engaged in self study of nonlinear robust and fault tolerant control **The Control Handbook (three volume set)** William S. Levine,2018-10-08 At publication The Control Handbook immediately became the definitive resource that engineers working with modern control systems required Among its many accolades that first edition was cited by the AAP as the Best Engineering Handbook of 1996 Now 15 years later William Levine has once again compiled the most comprehensive and authoritative resource on control engineering He has fully reorganized the text to reflect the technical advances achieved since the last edition and has expanded its contents to include the multidisciplinary perspective that is making control engineering a critical component in so many fields Now expanded from one to three volumes The Control Handbook Second Edition brilliantly organizes cutting edge contributions from more than 200 leading experts representing every corner of the globe They cover everything from basic closed loop systems to multi agent adaptive systems and from the control of electric motors to the control of complex networks Progressively organized the three volume set includes Control System Fundamentals Control System Applications Control System Advanced Methods Any practicing engineer student or researcher working in fields as diverse as electronics aeronautics or biomedicine will find this handbook to be a time saving resource filled with invaluable formulas models methods and innovative thinking In fact any physicist biologist mathematician or researcher in any number of fields developing or improving products and systems will find the answers and ideas they need As with the first edition the new edition not only stands as a record of accomplishment in control engineering but provides researchers with the means to make further advances **The Control Systems Handbook** William S. Levine,2018-10-03 At publication The Control Handbook immediately became the definitive resource that engineers working with modern control systems required Among its many accolades that first edition was cited by the AAP as the Best Engineering Handbook of 1996 Now 15 years later William Levine has once again compiled the most comprehensive and authoritative resource on control engineering He has fully reorganized the text to reflect the technical advances achieved since the last edition and has expanded its contents to include the multidisciplinary perspective that is making control engineering a critical component in so many fields Now expanded from one to three volumes The Control Handbook Second Edition organizes cutting edge contributions from more than 200 leading experts The third volume Control System Advanced Methods includes design and analysis methods for MIMO linear and LTI systems Kalman filters and observers hybrid systems and nonlinear systems It also covers advanced considerations regarding Stability Adaptive controls System identification Stochastic control Control of distributed parameter systems Networks and networked controls As with the first edition the new edition not only stands as a record of accomplishment in control engineering but provides researchers with the means to make further advances Progressively organized the first two volumes in the set include Control System Fundamentals

Control System Applications **Advances in Engineering Research and Application** Kai-Uwe Sattler,Duy Cuong Nguyen,Ngoc Pi Vu,Banh Tien Long,Horst Puta,2020-11-23 This proceedings book features volumes gathered selected contributions from the International Conference on Engineering Research and Applications ICERA 2020 organized at Thai Nguyen University of Technology on December 1 2 2020 The conference focused on the original researches in a broad range of areas such as Mechanical Engineering Materials and Mechanics of Materials Mechatronics and Micromechatronics Automotive Engineering Electrical and Electronics Engineering and Information and Communication Technology Therefore the book provides the research community with authoritative reports on developments in the most exciting areas in these fields *Model Free Adaptive Control* Zhongsheng Hou,Shangtai Jin,2013-09-24 Model Free Adaptive Control Theory and Applications summarizes theory and applications of model free adaptive control MFAC MFAC is a novel adaptive control method for the unknown discrete time nonlinear systems with time varying parameters and time varying structure and the design and analysis of MFAC merely depend on the measured input and ou **Encyclopedia of the Sciences of Learning** Norbert M. Seel,2011-10-05 Over the past century educational psychologists and researchers have posited many theories to explain how individuals learn i e how they acquire organize and deploy knowledge and skills The 20th century can be considered the century of psychology on learning and related fields of interest such as motivation cognition metacognition etc and it is fascinating to see the various mainstreams of learning remembered and forgotten over the 20th century and note that basic assumptions of early theories survived several paradigm shifts of psychology and epistemology Beyond folk psychology and its na ve theories of learning psychological learning theories can be grouped into some basic categories such as behaviorist learning theories connectionist learning theories cognitive learning theories constructivist learning theories and social learning theories Learning theories are not limited to psychology and related fields of interest but rather we can find the topic of learning in various disciplines such as philosophy and epistemology education information science biology and as a result of the emergence of computer technologies especially also in the field of computer sciences and artificial intelligence As a consequence machine learning struck a chord in the 1980s and became an important field of the learning sciences in general As the learning sciences became more specialized and complex the various fields of interest were widely spread and separated from each other as a consequence even presently there is no comprehensive overview of the sciences of learning or the central theoretical concepts and vocabulary on which researchers rely The Encyclopedia of the Sciences of Learning provides an up to date broad and authoritative coverage of the specific terms mostly used in the sciences of learning and its related fields including relevant areas of instruction pedagogy cognitive sciences and especially machine learning and knowledge engineering This modern compendium will be an indispensable source of information for scientists educators engineers and technical staff active in all fields of learning More specifically the Encyclopedia provides fast access to the most relevant theoretical terms provides up to date broad and authoritative coverage of the most important theories

within the various fields of the learning sciences and adjacent sciences and communication technologies supplies clear and precise explanations of the theoretical terms cross references to related entries and up to date references to important research and publications The Encyclopedia also contains biographical entries of individuals who have substantially contributed to the sciences of learning the entries are written by a distinguished panel of researchers in the various fields of the learning sciences **2005 IEEE International Symposium on Intelligent Control & 13th Mediterranean Conference on Control and Automation** ,2005 **IEEE Transactions on Circuits and Systems** ,2005 Control and Intelligent Systems ,2003 **Iterative Learning Control** David H. Owens,2015-10-31 This book develops a coherent and quite general theoretical approach to algorithm design for iterative learning control based on the use of operator representations and quadratic optimization concepts including the related ideas of inverse model control and gradient based design Using detailed examples taken from linear discrete and continuous time systems the author gives the reader access to theories based on either signal or parameter optimization Although the two approaches are shown to be related in a formal mathematical sense the text presents them separately as their relevant algorithm design issues are distinct and give rise to different performance capabilities Together with algorithm design the text demonstrates the underlying robustness of the paradigm and also includes new control laws that are capable of incorporating input and output constraints enable the algorithm to reconfigure systematically in order to meet the requirements of different reference and auxiliary signals and also to support new properties such as spectral annihilation Iterative Learning Control will interest academics and graduate students working in control who will find it a useful reference to the current status of a powerful and increasingly popular method of control The depth of background theory and links to practical systems will be of use to engineers responsible for precision repetitive processes *Proceedings of the ... IEEE International Conference on Control Applications* ,1996

Real-time Iterative Learning Control Jian-Xin Xu,Sanjib K. Panda,Tong Heng Lee,2008-12-12 Real time Iterative Learning Control demonstrates how the latest advances in iterative learning control ILC can be applied to a number of plants widely encountered in practice The book gives a systematic introduction to real time ILC design and source of illustrative case studies for ILC problem solving the fundamental concepts schematics configurations and generic guidelines for ILC design and implementation are enhanced by a well selected group of representative simple and easy to learn example applications Key issues in ILC design and implementation in linear and nonlinear plants pervading mechatronics and batch processes are addressed in particular ILC design in the continuous and discrete time domains design in the frequency and time domains design with problem specific performance objectives including robustness and optimality design in a modular approach by integration with other control techniques and design by means of classical tools based on Bode plots and state space

Adaptation and Learning in Control and Signal Processing 2001 S. Bittanti,2002-09-19 In control and signal processing adaptation is a natural tool to cope with real time changes in the dynamical behaviour of signals and systems In this area

strongly connected with prediction and identification there has been an increasing interest in switching and supervising methods Moreover in recent years special attention has been paid to the ideas evolving round the theory of statistical learning as a potential tool of improved adaptation The IFAC workshop on Adaptation and Learning in Control and Signal Processing in 2001 gathered together experts in the field and interested researchers from universities and industry to present a full picture of the area This proceedings volume presents papers covering the following subjects Model reference and predictive control Multiple model control Adaptive control I II Adaptive control and learning Learning Adaptive control of nonlinear systems I II Supervisory control Neural networks for control PID design methods Sliding mode Adaptive filtering and estimation Identification methods I II SICE 2002 Keisoku Jidō Seigyo Gakkai (Japan). Gakujutsu Kōenkai,2002

Intelligent Components and Instruments for Control Applications 1992 A. Ollero,E. F. Camacho,1993 Intelligent control is an emergent field involving the development of new control techniques such as reasoning learning and perception and has a great impact on a number of applications including robotics and process control The symposium brought together control systems specialists equipment manufacturers and end users to evaluate techniques components and instruments for intelligent control The selected papers in this volume cover intelligent control techniques actuators sensors image processing computer vision software and communications Papers relating to applications such as robotics power and process control manufacturing aerospace and traffic control are also included

The Enigmatic Realm of **Iterative Learning Control Convergence Robustneb And Applications**: Unleashing the Language is Inner Magic

In a fast-paced digital era where connections and knowledge intertwine, the enigmatic realm of language reveals its inherent magic. Its capacity to stir emotions, ignite contemplation, and catalyze profound transformations is nothing lacking extraordinary. Within the captivating pages of **Iterative Learning Control Convergence Robustneb And Applications** a literary masterpiece penned by a renowned author, readers set about a transformative journey, unlocking the secrets and untapped potential embedded within each word. In this evaluation, we shall explore the book is core themes, assess its distinct writing style, and delve into its lasting affect the hearts and minds of people who partake in its reading experience.

https://dev.flighttrampolinepark.com/public/book-search/Download_PDFS/Larchitecture%20Lyrique%20Madiavale%20Analyse%20Matrique%20Modalis.pdf

Table of Contents Iterative Learning Control Convergence Robustneb And Applications

1. Understanding the eBook Iterative Learning Control Convergence Robustneb And Applications
    - The Rise of Digital Reading Iterative Learning Control Convergence Robustneb And Applications
    - Advantages of eBooks Over Traditional Books
2. Identifying Iterative Learning Control Convergence Robustneb And Applications
    - Exploring Different Genres
    - Considering Fiction vs. Non-Fiction
    - Determining Your Reading Goals
3. Choosing the Right eBook Platform
    - Popular eBook Platforms
    - Features to Look for in an Iterative Learning Control Convergence Robustneb And Applications
    - User-Friendly Interface
4. Exploring eBook Recommendations from Iterative Learning Control Convergence Robustneb And Applications
    - Personalized Recommendations

    - Iterative Learning Control Convergence Robustneb And Applications User Reviews and Ratings
    - Iterative Learning Control Convergence Robustneb And Applications and Bestseller Lists
5. Accessing Iterative Learning Control Convergence Robustneb And Applications Free and Paid eBooks
    - Iterative Learning Control Convergence Robustneb And Applications Public Domain eBooks
    - Iterative Learning Control Convergence Robustneb And Applications eBook Subscription Services
    - Iterative Learning Control Convergence Robustneb And Applications Budget-Friendly Options
6. Navigating Iterative Learning Control Convergence Robustneb And Applications eBook Formats
    - ePub, PDF, MOBI, and More
    - Iterative Learning Control Convergence Robustneb And Applications Compatibility with Devices
    - Iterative Learning Control Convergence Robustneb And Applications Enhanced eBook Features
7. Enhancing Your Reading Experience
    - Adjustable Fonts and Text Sizes of Iterative Learning Control Convergence Robustneb And Applications
    - Highlighting and Note-Taking Iterative Learning Control Convergence Robustneb And Applications
    - Interactive Elements Iterative Learning Control Convergence Robustneb And Applications
8. Staying Engaged with Iterative Learning Control Convergence Robustneb And Applications
    - Joining Online Reading Communities
    - Participating in Virtual Book Clubs
    - Following Authors and Publishers Iterative Learning Control Convergence Robustneb And Applications
9. Balancing eBooks and Physical Books Iterative Learning Control Convergence Robustneb And Applications
    - Benefits of a Digital Library
    - Creating a Diverse Reading Collection Iterative Learning Control Convergence Robustneb And Applications
10. Overcoming Reading Challenges
    - Dealing with Digital Eye Strain
    - Minimizing Distractions
    - Managing Screen Time
11. Cultivating a Reading Routine Iterative Learning Control Convergence Robustneb And Applications
    - Setting Reading Goals Iterative Learning Control Convergence Robustneb And Applications
    - Carving Out Dedicated Reading Time
12. Sourcing Reliable Information of Iterative Learning Control Convergence Robustneb And Applications
    - Fact-Checking eBook Content of Iterative Learning Control Convergence Robustneb And Applications

    - Distinguishing Credible Sources
13. Promoting Lifelong Learning
    - Utilizing eBooks for Skill Development
    - Exploring Educational eBooks
14. Embracing eBook Trends
    - Integration of Multimedia Elements
    - Interactive and Gamified eBooks

Iterative Learning Control Convergence Robustneb And Applications Introduction

Free PDF Books and Manuals for Download: Unlocking Knowledge at Your Fingertips In todays fast-paced digital age, obtaining valuable knowledge has become easier than ever. Thanks to the internet, a vast array of books and manuals are now available for free download in PDF format. Whether you are a student, professional, or simply an avid reader, this treasure trove of downloadable resources offers a wealth of information, conveniently accessible anytime, anywhere. The advent of online libraries and platforms dedicated to sharing knowledge has revolutionized the way we consume information. No longer confined to physical libraries or bookstores, readers can now access an extensive collection of digital books and manuals with just a few clicks. These resources, available in PDF, Microsoft Word, and PowerPoint formats, cater to a wide range of interests, including literature, technology, science, history, and much more. One notable platform where you can explore and download free Iterative Learning Control Convergence Robustneb And Applications PDF books and manuals is the internets largest free library. Hosted online, this catalog compiles a vast assortment of documents, making it a veritable goldmine of knowledge. With its easy-to-use website interface and customizable PDF generator, this platform offers a user-friendly experience, allowing individuals to effortlessly navigate and access the information they seek. The availability of free PDF books and manuals on this platform demonstrates its commitment to democratizing education and empowering individuals with the tools needed to succeed in their chosen fields. It allows anyone, regardless of their background or financial limitations, to expand their horizons and gain insights from experts in various disciplines. One of the most significant advantages of downloading PDF books and manuals lies in their portability. Unlike physical copies, digital books can be stored and carried on a single device, such as a tablet or smartphone, saving valuable space and weight. This convenience makes it possible for readers to have their entire library at their fingertips, whether they are commuting, traveling, or simply enjoying a lazy afternoon at home. Additionally, digital files are easily searchable, enabling readers to locate specific information within seconds. With a few keystrokes, users can search for keywords, topics, or phrases, making research and finding relevant information a breeze. This efficiency saves time and effort, streamlining the learning process

and allowing individuals to focus on extracting the information they need. Furthermore, the availability of free PDF books and manuals fosters a culture of continuous learning. By removing financial barriers, more people can access educational resources and pursue lifelong learning, contributing to personal growth and professional development. This democratization of knowledge promotes intellectual curiosity and empowers individuals to become lifelong learners, promoting progress and innovation in various fields. It is worth noting that while accessing free Iterative Learning Control Convergence Robustneb And Applications PDF books and manuals is convenient and cost-effective, it is vital to respect copyright laws and intellectual property rights. Platforms offering free downloads often operate within legal boundaries, ensuring that the materials they provide are either in the public domain or authorized for distribution. By adhering to copyright laws, users can enjoy the benefits of free access to knowledge while supporting the authors and publishers who make these resources available. In conclusion, the availability of Iterative Learning Control Convergence Robustneb And Applications free PDF books and manuals for download has revolutionized the way we access and consume knowledge. With just a few clicks, individuals can explore a vast collection of resources across different disciplines, all free of charge. This accessibility empowers individuals to become lifelong learners, contributing to personal growth, professional development, and the advancement of society as a whole. So why not unlock a world of knowledge today? Start exploring the vast sea of free PDF books and manuals waiting to be discovered right at your fingertips.

FAQs About Iterative Learning Control Convergence Robustneb And Applications Books

What is a Iterative Learning Control Convergence Robustneb And Applications PDF? A PDF (Portable Document Format) is a file format developed by Adobe that preserves the layout and formatting of a document, regardless of the software, hardware, or operating system used to view or print it. **How do I create a Iterative Learning Control Convergence Robustneb And Applications PDF?** There are several ways to create a PDF: Use software like Adobe Acrobat, Microsoft Word, or Google Docs, which often have built-in PDF creation tools. Print to PDF: Many applications and operating systems have a "Print to PDF" option that allows you to save a document as a PDF file instead of printing it on paper. Online converters: There are various online tools that can convert different file types to PDF. **How do I edit a Iterative Learning Control Convergence Robustneb And Applications PDF?** Editing a PDF can be done with software like Adobe Acrobat, which allows direct editing of text, images, and other elements within the PDF. Some free tools, like PDFescape or Smallpdf, also offer basic editing capabilities. **How do I convert a Iterative Learning Control Convergence Robustneb And Applications PDF to another file format?** There are multiple ways to convert a PDF to another format: Use online converters like Smallpdf, Zamzar, or Adobe Acrobats export feature to convert PDFs to formats like Word, Excel,

JPEG, etc. Software like Adobe Acrobat, Microsoft Word, or other PDF editors may have options to export or save PDFs in different formats. **How do I password-protect a Iterative Learning Control Convergence Robustneb And Applications PDF?** Most PDF editing software allows you to add password protection. In Adobe Acrobat, for instance, you can go to "File" -> "Properties" -> "Security" to set a password to restrict access or editing capabilities. Are there any free alternatives to Adobe Acrobat for working with PDFs? Yes, there are many free alternatives for working with PDFs, such as: LibreOffice: Offers PDF editing features. PDFsam: Allows splitting, merging, and editing PDFs. Foxit Reader: Provides basic PDF viewing and editing capabilities. How do I compress a PDF file? You can use online tools like Smallpdf, ILovePDF, or desktop software like Adobe Acrobat to compress PDF files without significant quality loss. Compression reduces the file size, making it easier to share and download. Can I fill out forms in a PDF file? Yes, most PDF viewers/editors like Adobe Acrobat, Preview (on Mac), or various online tools allow you to fill out forms in PDF files by selecting text fields and entering information. Are there any restrictions when working with PDFs? Some PDFs might have restrictions set by their creator, such as password protection, editing restrictions, or print restrictions. Breaking these restrictions might require specific software or tools, which may or may not be legal depending on the circumstances and local laws.

Find Iterative Learning Control Convergence Robustneb And Applications :

larchitecture lyrique madiavale analyse matrique modalis
accounting practice manager budget weekly manual excel
used toyota corolla sale owner
97 mitsubishi pajero manual
~~a family at last mills boon mb~~
50 distraction techniques for people with depression
1996 seadoo workshop manual
~~1997 subaru outback wiring diagram~~
2002 honda 15hp manual
mercruiser alpha one drive manual
manual alcatel x pop 5035
~~where can i buy game of thrones books~~
1994 jeep gr cherokee transmission problems
manual bmw z4 2006
1989 chevy silverado 15service manual

Iterative Learning Control Convergence Robustneb And Applications :

le trône du roi dragon 5 chapitre 5 bilibili comics - Dec 06 2022
web le trône du roi dragon 5 chapitre 5 14p ep 5 you can rematch the comic images if they were placed in wrong direction page matching c show tool bar

le château du dragon wikipédia - Mar 29 2022
web le château du dragon dragonwyck est un film américain de joseph l mankiewicz sorti en 1946 synopsis modifier modifier le code une famille paysanne reçoit une lettre

le cha teau du roi dragon la saga du roi dragon v pdf - Aug 02 2022
web le cha teau du roi dragon la saga du roi dragon v 1 5 downloaded from avenza dev avenza com on december 6 2022 by guest le cha teau du roi dragon la saga

le cha teau du roi dragon la saga du roi dragon v pdf - May 31 2022
web mar 6 2023 le cha teau du roi dragon la saga du roi dragon v 2 4 downloaded from uniport edu ng on march 6 2023 by guest histoire de la revolution francaise jules

le cha teau du roi dragon la saga du roi dragon v robert - Jul 13 2023
web this le cha teau du roi dragon la saga du roi dragon v as one of the most in force sellers here will categorically be accompanied by the best options to review 2 romania

le cha teau du roi dragon la saga du roi dragon v stephen - Apr 10 2023
web recognizing the showing off ways to acquire this books le cha teau du roi dragon la saga du roi dragon v is additionally useful you have remained in right site to start

le trône du roi dragon bilibili comics - Jul 01 2022
web updated every thr le trône du roi dragon yi chao est un jour transporté contre son grès dans un autre temps et se retrouve dans la corps de ao fan prince héritier du

le château du roi dragon la saga du roi dragon vol 1 by - Sep 03 2022
web le moulin des sorciers les dragons centre de recherche et d information sur la la chine versailles les 51 meilleures images de chteau roi chevaliers y a t il vraiment

le cha teau du roi dragon la saga du roi dragon v 2023 - Mar 09 2023
web le cha teau du roi dragon la saga du roi dragon v la saga des florio feb 09 2022 tome 1 1799 paolo et ignazio florio quittent leur calabre natale pour s installer à

le cha teau du roi dragon la saga du roi dragon v pdf - Oct 04 2022

web jul 3 2023 le cha teau du roi dragon la saga du roi dragon v 1 5 downloaded from uniport edu ng on july 3 2023 by guest le cha teau du roi dragon la saga du roi

le cha teau du roi dragon la saga du roi dragon v robert - Jun 12 2023

web any way in the midst of them is this le cha teau du roi dragon la saga du roi dragon v that can be your partner french science fiction fantasy horror and pulp fiction

le cha teau du roi dragon la saga du roi dragon v pdf - Feb 08 2023

web jun 17 2023 le cha teau du roi dragon la saga du roi dragon v pdf recognizing the way ways to get this books le cha teau du roi dragon la saga du roi dragon v

la saga du roi dragon tome 1 le château du roi dragon - Aug 14 2023

web jun 1 2019 un chevalier mortellement blessé porteur d un message d une extrême importance s écroule sur le seuil du temple d ariel le paisible temple se retrouve en

le cha teau du roi dragon la saga du roi dragon v pdf full - Oct 24 2021

web jun 30 2023 le cha teau du roi dragon la saga du roi dragon v pdf is available in our book collection an online access to it is set as public so you can download it

le château du roi dragon la saga du roi dragon vol 1 by - Feb 25 2022

web jun 8 2023 solely expressed the le château du roi dragon la saga du roi dragon vol 1 by stephen lawhead is globally compatible with any devices to browse in the direction of

fairy tail saison 5 le roi dragon télérama vodkaster - Apr 29 2022

web le roi dragon Épisode 1 de la saison 5 de fairy tail une série tv lancée en 2009 cette découverte est l occasion pour natsu et les autres d en apprendre plus sur le

le château du roi dragon la saga du roi dragon vol 1 by - Sep 22 2021

web may 15 2023 le château du roi dragon la saga du roi dragon vol 1 by stephen lawhead le château du roi dragon la saga du roi dragon vol 1 by stephen

le château du roi dragon la saga du roi dragon vol 1 by - Nov 24 2021

web april 29th 2020 le château servit de prison à jacques c ur et au futur roi de france louis xii le 27 septembre 1574 durant la cinquième guerre de religion le duc de

le cha teau du roi dragon la saga du roi dragon v pdf - Jan 07 2023

web apr 15 2023 its not quite what you compulsion currently this le cha teau du roi dragon la saga du roi dragon v as one of the most functioning sellers here will categorically be

le château du roi dragon la saga du roi dragon vol 1 by - Jan 27 2022

web le château du démon 1987 regarder paragus propose à vegeta de devenir le nouveau roi de la nouvelle planète vegeta et de vaincre le légendaire guerrier de l espace sur

le château du roi dragon la saga du roi dragon vol 1 by - May 11 2023

web jun 17 2023 le château du roi dragon la saga du roi dragon vol 1 by stephen lawhead le château du roi dragon la saga du roi dragon vol 1 by stephen fr

le château du roi dragon la saga du roi dragon vol 1 by - Dec 26 2021

web le château du roi dragon la saga du roi dragon vol 1 by stephen lawhead l usurpateur et plonge au coeur d un conflit dont va dépendre le sort du roi et du

le cha teau du roi dragon la saga du roi dragon v pdf pdf - Nov 05 2022

web le cha teau du roi dragon la saga du roi dragon v pdf thank you unquestionably much for downloading le cha teau du roi dragon la saga du roi dragon v

chemical oceanography 4th edition vitalsource - Dec 26 2021

chemical oceanography second edition frank j millero - Oct 04 2022

web chemical oceanography is one of the core requirements of almost all undergraduate and graduate programs in marine science and oceanography in this third edition of frank

chemical oceanography by frank j millero alibris - Mar 29 2022

web dec 10 2022 crc press language english pages 469 previews available in english subjects chemical oceanography oceanografia quimica océanographie chimique

chemical oceanography marine science series by - Dec 06 2022

web jun 6 2013 chemical oceanography frank j millero 4 50 2 ratings0 reviews over the past ten years a number of new large scale oceanographic programs have been

chemical oceanography third edition frank j millero google - Feb 08 2023

web frank j millero pages 1 88 select chapter 44 the geochemical ocean sections study geosecs book chapter full text access chapter 44 the geochemical

pdf chemical oceanography by frank j millero perlego - Feb 25 2022

web feb 12 2022 millero frank j publication date 2013 topics chemical oceanography publisher boca raton taylor francis collection inlibrary printdisabled

chemical oceanography by frank j millero open library - Jan 07 2023

web chemical oceanography second edition frank j millero google books from harvard university to the university of miami

the first edition of chemical oceanography was a

chemical oceanography millero frank j free download - Jun 12 2023

web apr 26 2013 authored by frank j millero an acknowledged international authority in the field the fourth edition of chemical oceanography maintains the stellar insight that has

chemical oceanography frank j millero taylor francis - May 11 2023

web apr 19 2016 frank j millero crc press apr 19 2016 science 591 pages over the past ten years a number of new large scale oceanographic programs have been

chemical oceanography frank j millero google books - Mar 09 2023

web aug 24 2020 chemical oceanography by frank j millero 0 ratings 1 want to read 0 currently reading 0 have read this edition doesn t have a description yet can you add

chemical oceanography fourth edition frank j millero - Apr 10 2023

web sep 9 2005 frank j millero crc press sep 9 2005 science 536 pages chemical oceanography third edition is a survey of essential concepts that contains a wealth of

chemical oceanography by frank j millero open library - Nov 24 2021

chemical oceanography millero frank j - Sep 03 2022

web apr 26 2013 authored by frank j millero an acknowledged international authority in the field the fourth edition of chemical oceanography maintains the stellar insight that has

chemical oceanography 4th edition frank j millero - Jul 13 2023

web sep 9 2005 chemical oceanography third edition is a survey of essential concepts that contains a wealth of new data and maps resulting in a more in depth examination of

chemical oceanography 4th edition vitalsource - Jan 27 2022

web chemical oceanography 4th edition is written by frank j millero and published by crc press the digital and etextbook isbns for chemical oceanography are

chemical oceanography millero frank j 9781466512498 - Apr 29 2022

web chemical oceanography 4th edition is written by frank j millero and published by crc press the digital and etextbook isbns for chemical oceanography are

chemical oceanography third edition marine science - Jul 01 2022

web about this book over the past ten years a number of new large scale oceanographic programs have been initiated these include the climate variability program clivar

chemical oceanography 4th edition vitalsource - Sep 22 2021

chemical oceanography millero frank j free download - Oct 24 2021

chemical oceanography frank j millero taylor - Aug 14 2023
web 469 pages 26 cm chemical oceanography second edition remains an important textbook and useful reference for students and researchers each chapter has been
chemical oceanography by frank j millero goodreads - Aug 02 2022
web buy chemical oceanography by frank j millero online at alibris we have new and used copies available in 2 editions starting at 4 26 shop now add to cart add this copy
chemical oceanography sciencedirect - Nov 05 2022
web sep 9 2005 chemical oceanography 125 00 7 only 1 left in stock more on the way chemical oceanography third edition is a survey of essential concepts that contains
chemical oceanography third edition oceanography - May 31 2022
web chemical oceanography 4th edition is written by frank j millero and published by crc press the digital and etextbook isbns for chemical oceanography are
free political flyer template download in word google docs - Oct 29 2022
web free political flyer template printable download choose a political flyer for a candidate meeting meet and greet fundraiser campaign candidate rally city school board council or presidential candidate s rally from template net that you can use to attract a
15 best political flyer and poster psd templates free download - Nov 29 2022
web sep 27 2016 political race flyer 6 more info download political race flyer blurb is adobe photoshop print template incredible to advance approaches at decision time or different occasions political election campaign flyer templates simple to alter psd document with named and composed layers just free textual styles utilized
how to crush it on your campaign flyers numero blog - Mar 22 2022
web november 19 2021 getting started when you re a candidate looking to make an impression on voters and potential donors campaign flyers are a versatile marketing tool that helps you reach both groups for a simple reason campaign flyers can be tailored to align with many aspects of your campaign fundraising canvassing gotv etc
free political flyer word template download template net - Mar 02 2023
web do you have an upcoming election soon create eye catching political flyers for your campaign browse template net s

wide collection of sample political candidate tri fold brochures election posters vote wisely pamphlets and all kinds of campaign posters download a free template now in microsoft word and start customizing a flyer now

political flyer 10 examples format pdf examples - Jul 06 2023

web 10 political flyer examples 1 political flyer template details file format microsoft word adobe photoshop adobe indesign apple mac pages microsoft publisher adobe illustrator google docs download 2 political fundraiser flyer template details file format microsoft word adobe photoshop adobe indesign

30 best political flyer 2023 for politicians frip in - Aug 07 2023

web a political flyer template is perfect for networking and advertisement to give an excellent design for your political flyer we have collected these political flyer templates which you can use for networking publicity postings social media marketing and much more

how make a political flyer 17 templates - Sep 27 2022

web political flyer template get this sample political flyer and make a catchy statement that can be read from afar make sure it adds to or is relevant to who the candidate is by downloading this template you ll have an attractive set of graphics that fit the content or message you intend to share

free printable customizable election poster templates canva - Sep 08 2023

web for professionally printed copies order from canva print you ll receive a stack of election posters with a high quality finish ready for posting and distribution gather support for your candidate with effective election campaign posters you can customize for free on canva

election leaflets 7 best design examples solopress uk - Apr 22 2022

web apr 11 2019 7 election leaflets that made their mark by solopress april 11 2019 election time brings about fierce debates campaigning and a collection of political leaflets that try to grab voters attention creating effective campaign leaflets is all about getting the design right to help catch the eye of the electorate

political flyer templates 23 free premium download - May 24 2022

web ultimate political flyer templates bundle consists of 12 stupendously designed political flyers for you to choose from get hold of these gorgeous looking political flyers and put them to use right away

political flyer images free download on freepik - Feb 18 2022

web images 97 61k collections 4 ads ads ads page 1 of 200 find download free graphic resources for political flyer 97 000 vectors stock photos psd files free for commercial use high quality images

campaign with these elegant free political campaign flyer demplates - Jul 26 2022

web free political campaign flyer templates checkout the below list to suit your need election flyer template microsoft word

the flyer is an attractive one with stripes in bright red and blue at the top along with a text on a white star like shape
political campaign flyer images free download on freepik - Aug 27 2022
web find download free graphic resources for political campaign flyer 97 000 vectors stock photos psd files free for commercial use high quality images you can find download the most popular political campaign flyer vectors on freepik
100 free templates for political candidate flyer template - May 04 2023
web create free political candidate template flyers posters social media graphics and videos in minutes choose from 100 eye catching templates to wow your audience
free custom printable election flyer templates canva - Oct 09 2023
web find election flyer designs that reflect your party or political organization our gallery also features templates that spread awareness about electoral policies and conduct you can craft flyers that educate voters and encourage them to exercise their voting rights
free printable campaign poster templates to customize canva - Dec 31 2022
web whether you re fighting for a certain advocacy or running a political campaign a poster can help you sway people to your cause canva s online campaign poster maker makes designing a breeze with its drag and drop feature and built in editing tools
free customizable political poster templates adobe express - Jun 24 2022
web choose from dozens of online political poster template ideas from adobe express to help you easily create your own free political poster all creative skill levels are welcome
tips for creating a great political campaign brochure online candidate - Apr 03 2023
web include a call to action this is usually a reminder to vote on election day or perhaps a statement about the candidate or the opposition these guidelines apply for both candidate and political party pamphlets election leaflets campaign handouts and flyers what makes a good brochure design
2 6k free campaign poster templates postermywall - Jun 05 2023
web 2 620 free campaign poster templates win your election campaigns with custom flyers videos and social media graphics personalize print and publish online in minutes 4 8 5 859
free election flyer templates venngage - Feb 01 2023
web creating an election flyer template allows you to efficiently convey essential information about your campaign such as your platform candidate biography and contact information moreover a well designed flyer can inspire confidence in your candidacy and boost your chances of success with customizable templates you can easily tailor your