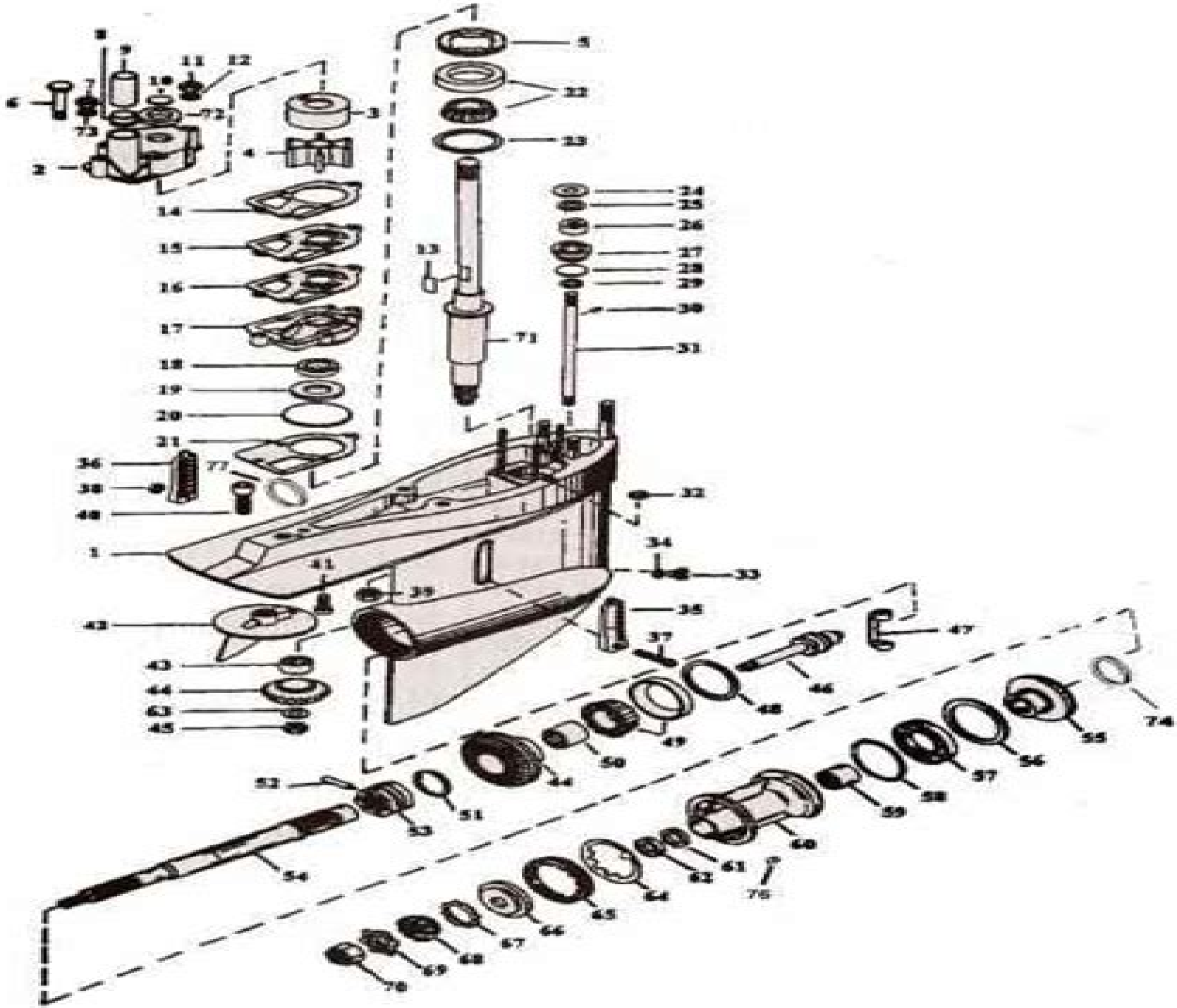

Mercruiser Alpha One Lower Unit Diagram

S Ashworth

Mercruiser Alpha One Lower Unit Diagram:

Boating ,2004-06 **MotorBoating** ,1988-06 *Boating* ,1993-07 *Boating* ,1988-01 Boating ,2008-04 **Boating** ,1993-07 **Popular Mechanics** ,1993-09 Popular Mechanics inspires instructs and influences readers to help them master the modern world Whether it s practical DIY home improvement tips gadgets and digital technology information on the newest cars or the latest breakthroughs in science PM is the ultimate guide to our high tech lifestyle Atlantic Fisherman ,1989 **Boating** ,1985-07 **Popular Mechanics** ,1993-09 Popular Mechanics inspires instructs and influences readers to help them master the modern world Whether it s practical DIY home improvement tips gadgets and digital technology information on the newest cars or the latest breakthroughs in science PM is the ultimate guide to our high tech lifestyle *Lakeland Boating* ,1993-07 **Mercury Stern Drive (1964 - 1992)** Seloc,1999-05-01 SELOC Marine maintenance and repair manuals offer the most comprehensive authoritative information available for outboard inboard stern drive and diesel engines as well as personal watercraft SELOC has been the leading source of how to information for the marine industry since 1974 Designed and written to serve the needs of the professional mechanic do it yourself boat enthusiast instructor and student these manuals are based on actual teardowns done by Chilton Marine s editors authors in our on site facility Providing complete coverage on everything from basic maintenance to engine overhaul every manual features Simple to follow step by step illustrated procedures Hundreds of exploded drawings photographs and tables Troubleshooting sections accurate specifications and wiring diagrams Recognized and used by technical trade schools as well as the U S military Covers Type 1 Alpha MR and Bravo I and II units powered by Ford and GM 4 cylinder in line 6 V6 and V8 engines Over 1 430 illustrations Boating ,1990-07 *Glass-fibre Boat Repair* James Yates,1992 Aims to give enough knowledge for the average boat owner to effect repairs to the hull and superstructure of a glass fibre boat It also contains details on the care of the engine and the plumbing system Repair techniques are described for most of the common problems

Detroit Suburban Downriver Area Telephone Directories ,1991 *Ship & Boat International* ,2005 MacRae's Industrial Directory ,1997

Whispering the Secrets of Language: An Emotional Quest through **Mercruiser Alpha One Lower Unit Diagram**

In a digitally-driven world wherever displays reign great and quick interaction drowns out the subtleties of language, the profound secrets and psychological subtleties hidden within phrases usually move unheard. However, nestled within the pages of **Mercruiser Alpha One Lower Unit Diagram** a charming fictional value sporting with organic emotions, lies an extraordinary quest waiting to be undertaken. Published by a skilled wordsmith, that charming opus invites readers on an introspective trip, softly unraveling the veiled truths and profound impact resonating within ab muscles fabric of each word. Within the emotional depths of the touching review, we shall embark upon a heartfelt exploration of the book is primary themes, dissect its interesting publishing type, and yield to the effective resonance it evokes deep within the recesses of readers hearts.

https://dev.flighttrampolinepark.com/public/virtual-library/Download_PDFS/%20holden%20astra%20repair%20manual.pdf

Table of Contents Mercruiser Alpha One Lower Unit Diagram

1. Understanding the eBook Mercruiser Alpha One Lower Unit Diagram
    - The Rise of Digital Reading Mercruiser Alpha One Lower Unit Diagram
    - Advantages of eBooks Over Traditional Books
2. Identifying Mercruiser Alpha One Lower Unit Diagram
    - Exploring Different Genres
    - Considering Fiction vs. Non-Fiction
    - Determining Your Reading Goals
3. Choosing the Right eBook Platform
    - Popular eBook Platforms
    - Features to Look for in an Mercruiser Alpha One Lower Unit Diagram
    - User-Friendly Interface
4. Exploring eBook Recommendations from Mercruiser Alpha One Lower Unit Diagram
    - Personalized Recommendations

    - Mercruiser Alpha One Lower Unit Diagram User Reviews and Ratings
    - Mercruiser Alpha One Lower Unit Diagram and Bestseller Lists
5. Accessing Mercruiser Alpha One Lower Unit Diagram Free and Paid eBooks
    - Mercruiser Alpha One Lower Unit Diagram Public Domain eBooks
    - Mercruiser Alpha One Lower Unit Diagram eBook Subscription Services
    - Mercruiser Alpha One Lower Unit Diagram Budget-Friendly Options
6. Navigating Mercruiser Alpha One Lower Unit Diagram eBook Formats
    - ePub, PDF, MOBI, and More
    - Mercruiser Alpha One Lower Unit Diagram Compatibility with Devices
    - Mercruiser Alpha One Lower Unit Diagram Enhanced eBook Features
7. Enhancing Your Reading Experience
    - Adjustable Fonts and Text Sizes of Mercruiser Alpha One Lower Unit Diagram
    - Highlighting and Note-Taking Mercruiser Alpha One Lower Unit Diagram
    - Interactive Elements Mercruiser Alpha One Lower Unit Diagram
8. Staying Engaged with Mercruiser Alpha One Lower Unit Diagram
    - Joining Online Reading Communities
    - Participating in Virtual Book Clubs
    - Following Authors and Publishers Mercruiser Alpha One Lower Unit Diagram
9. Balancing eBooks and Physical Books Mercruiser Alpha One Lower Unit Diagram
    - Benefits of a Digital Library
    - Creating a Diverse Reading Collection Mercruiser Alpha One Lower Unit Diagram
10. Overcoming Reading Challenges
    - Dealing with Digital Eye Strain
    - Minimizing Distractions
    - Managing Screen Time
11. Cultivating a Reading Routine Mercruiser Alpha One Lower Unit Diagram
    - Setting Reading Goals Mercruiser Alpha One Lower Unit Diagram
    - Carving Out Dedicated Reading Time
12. Sourcing Reliable Information of Mercruiser Alpha One Lower Unit Diagram
    - Fact-Checking eBook Content of Mercruiser Alpha One Lower Unit Diagram

    - Distinguishing Credible Sources
13. Promoting Lifelong Learning
    - Utilizing eBooks for Skill Development
    - Exploring Educational eBooks
14. Embracing eBook Trends
    - Integration of Multimedia Elements
    - Interactive and Gamified eBooks

Mercruiser Alpha One Lower Unit Diagram Introduction

In this digital age, the convenience of accessing information at our fingertips has become a necessity. Whether its research papers, eBooks, or user manuals, PDF files have become the preferred format for sharing and reading documents. However, the cost associated with purchasing PDF files can sometimes be a barrier for many individuals and organizations. Thankfully, there are numerous websites and platforms that allow users to download free PDF files legally. In this article, we will explore some of the best platforms to download free PDFs. One of the most popular platforms to download free PDF files is Project Gutenberg. This online library offers over 60,000 free eBooks that are in the public domain. From classic literature to historical documents, Project Gutenberg provides a wide range of PDF files that can be downloaded and enjoyed on various devices. The website is user-friendly and allows users to search for specific titles or browse through different categories. Another reliable platform for downloading Mercruiser Alpha One Lower Unit Diagram free PDF files is Open Library. With its vast collection of over 1 million eBooks, Open Library has something for every reader. The website offers a seamless experience by providing options to borrow or download PDF files. Users simply need to create a free account to access this treasure trove of knowledge. Open Library also allows users to contribute by uploading and sharing their own PDF files, making it a collaborative platform for book enthusiasts. For those interested in academic resources, there are websites dedicated to providing free PDFs of research papers and scientific articles. One such website is Academia.edu, which allows researchers and scholars to share their work with a global audience. Users can download PDF files of research papers, theses, and dissertations covering a wide range of subjects. Academia.edu also provides a platform for discussions and networking within the academic community. When it comes to downloading Mercruiser Alpha One Lower Unit Diagram free PDF files of magazines, brochures, and catalogs, Issuu is a popular choice. This digital publishing platform hosts a vast collection of publications from around the world. Users can search for specific titles or explore various categories and genres. Issuu offers a seamless reading experience with its user-friendly interface and allows users to download PDF files for offline reading. Apart from dedicated platforms, search engines also play a crucial role in finding free PDF files. Google, for

instance, has an advanced search feature that allows users to filter results by file type. By specifying the file type as "PDF," users can find websites that offer free PDF downloads on a specific topic. While downloading Mercruiser Alpha One Lower Unit Diagram free PDF files is convenient, its important to note that copyright laws must be respected. Always ensure that the PDF files you download are legally available for free. Many authors and publishers voluntarily provide free PDF versions of their work, but its essential to be cautious and verify the authenticity of the source before downloading Mercruiser Alpha One Lower Unit Diagram. In conclusion, the internet offers numerous platforms and websites that allow users to download free PDF files legally. Whether its classic literature, research papers, or magazines, there is something for everyone. The platforms mentioned in this article, such as Project Gutenberg, Open Library, Academia.edu, and Issuu, provide access to a vast collection of PDF files. However, users should always be cautious and verify the legality of the source before downloading Mercruiser Alpha One Lower Unit Diagram any PDF files. With these platforms, the world of PDF downloads is just a click away.

FAQs About Mercruiser Alpha One Lower Unit Diagram Books

How do I know which eBook platform is the best for me? Finding the best eBook platform depends on your reading preferences and device compatibility. Research different platforms, read user reviews, and explore their features before making a choice. Are free eBooks of good quality? Yes, many reputable platforms offer high-quality free eBooks, including classics and public domain works. However, make sure to verify the source to ensure the eBook credibility. Can I read eBooks without an eReader? Absolutely! Most eBook platforms offer webbased readers or mobile apps that allow you to read eBooks on your computer, tablet, or smartphone. How do I avoid digital eye strain while reading eBooks? To prevent digital eye strain, take regular breaks, adjust the font size and background color, and ensure proper lighting while reading eBooks. What the advantage of interactive eBooks? Interactive eBooks incorporate multimedia elements, quizzes, and activities, enhancing the reader engagement and providing a more immersive learning experience. Mercruiser Alpha One Lower Unit Diagram is one of the best book in our library for free trial. We provide copy of Mercruiser Alpha One Lower Unit Diagram in digital format, so the resources that you find are reliable. There are also many Ebooks of related with Mercruiser Alpha One Lower Unit Diagram. Where to download Mercruiser Alpha One Lower Unit Diagram online for free? Are you looking for Mercruiser Alpha One Lower Unit Diagram PDF? This is definitely going to save you time and cash in something you should think about. If you trying to find then search around for online. Without a doubt there are numerous these available and many of them have the freedom. However without doubt you receive whatever you purchase. An alternate way to get ideas is always to check another Mercruiser Alpha One Lower Unit Diagram. This method for see exactly what may be included and

adopt these ideas to your book. This site will almost certainly help you save time and effort, money and stress. If you are looking for free books then you really should consider finding to assist you try this. Several of Mercruiser Alpha One Lower Unit Diagram are for sale to free while some are payable. If you arent sure if the books you would like to download works with for usage along with your computer, it is possible to download free trials. The free guides make it easy for someone to free access online library for download books to your device. You can get free download on free trial for lots of books categories. Our library is the biggest of these that have literally hundreds of thousands of different products categories represented. You will also see that there are specific sites catered to different product types or categories, brands or niches related with Mercruiser Alpha One Lower Unit Diagram. So depending on what exactly you are searching, you will be able to choose e books to suit your own need. Need to access completely for Campbell Biology Seventh Edition book? Access Ebook without any digging. And by having access to our ebook online or by storing it on your computer, you have convenient answers with Mercruiser Alpha One Lower Unit Diagram To get started finding Mercruiser Alpha One Lower Unit Diagram, you are right to find our website which has a comprehensive collection of books online. Our library is the biggest of these that have literally hundreds of thousands of different products represented. You will also see that there are specific sites catered to different categories or niches related with Mercruiser Alpha One Lower Unit Diagram So depending on what exactly you are searching, you will be able tochoose ebook to suit your own need. Thank you for reading Mercruiser Alpha One Lower Unit Diagram. Maybe you have knowledge that, people have search numerous times for their favorite readings like this Mercruiser Alpha One Lower Unit Diagram, but end up in harmful downloads. Rather than reading a good book with a cup of coffee in the afternoon, instead they juggled with some harmful bugs inside their laptop. Mercruiser Alpha One Lower Unit Diagram is available in our book collection an online access to it is set as public so you can download it instantly. Our digital library spans in multiple locations, allowing you to get the most less latency time to download any of our books like this one. Merely said, Mercruiser Alpha One Lower Unit Diagram is universally compatible with any devices to read.

Find Mercruiser Alpha One Lower Unit Diagram :

2002 holden astra repair manual
manual alfa romeo 159 romana
natwest gold credit card apr
manual body cavity search
~~journey around washington dc~~
a family affair summer truth in lies book
manual alfa vergina 50

la chanteuse no2 from l39hiver de l39enfance voice piano
~~20kenworth t800b wiring diagram~~
distributive property coloring
ballad of barking water
2009 audi tt camshaft seal manual
naughty counselor more than she can handle english edition
sociologia hunt horton
volvo penta steering systems repair manual s

Mercruiser Alpha One Lower Unit Diagram :

Introduction to Psychology, 9th Edition ... This is a very interesting book, The scenarios are real to life, though the chapters are a bit lengthy the authors hold your attention throughout. I have no ... Introduction to Psychology, 9th Edition - Softcover Introduction to Psychology, 9th Edition by Plotnik, Rod; Kouyoumdjian, Haig - ISBN 10: 0495812811 - ISBN 13: 9780495812814 - Wadsworth - 2010 - Softcover. Introduction to Psychology, 9th Edition James Kalat's best-selling INTRODUCTION TO PSYCHOLOGY does far more than cover major theories and studies; it encourages you to question the information and ... Introduction to Psychology, 9th Edition Jim Kalat's best-selling INTRODUCTION TO PSYCHOLOGY takes a "critical thinking" approach to the major theories and concerns of psychology. Introduction to Psychology | Rent | 9780495810766 COUPON: RENT Introduction to Psychology 9th edition (9780495810766) and save up to 80% on textbook rentals and 90% on used textbooks. introduction psychology 9th edition Health Psychology : An Introduction To Behavior And Health 9Th Edition. Linda Brannon, John Updegraff, Jess Feist. ISBN 13: 9789353503109. 9780495903444 - Introduction to Psychology by Rod Plotnik Edition: 9th; Format: Hardcover; Copyright: 2010-02-25; Publisher: Cengage Learning; View Upgraded Edition; More Book Details. Note: Supplemental materials are ... Introduction to Psychology 9th Edition IE (TE)(H) by James ... 2011 Introduction to Psychology ninth Edition -- Instructor's Edition (TE)(H) by James W. Kalat ***ISBN-13: 9780495813132 ***Condition: Good Used ***685 ... Cengage Advantage Books: Introduction to Psychology Rent Cengage Advantage Books: Introduction to Psychology 9th edition (978-0495903451) today, or search our site for other textbooks by Rod Plotnik. Introduction to Psychology - James W. Kalat Kalat is the author of INTRODUCTION TO PSYCHOLOGY, 9th Edition (Wadsworth, 2011) and has published articles on a variety of diverse topics such as taste ... Been Down So Long It Looks Like Up to Me hilarious, chilling, sexy, profound, maniacal, beautiful and outrageous all at the same time," in an introduction to the paperback version of Been Down.... Been Down So Long It Looks Like Up to Me (Penguin ... The book is about young adults in their formative years, presumabley intelligent but preoccupied with the hedonistic degeneracy of

criminal underclass. Even ... Been Down So Long It Looks Like Up to Me A witty, psychedelic, and telling novel of the 1960s. Richard Fariña evokes the Sixties as precisely, wittily, and poignantly as F. Scott Fitzgerald ... Richard Farina - Been Down so Long it Looks Like Up to Me Sing a song of sixpence, pocket full of rye, Four and twenty blackbirds, baked in a pie, When the pie was opened, the birds began to sing Wasn't ... Richard Fariña's “Been So Down It Looks Like Up to Me” ... Apr 29, 2016 — Richard Fariña's Been Down So Long It Looks Like Up to Me turns fifty. ... I am gazing, as I write, at a black-and-white photograph of Richard ... Been Down So Long It Looks Like Up to Me (film) Been Down So Long It Looks Like Up to Me is a 1971 American drama film directed by Jeffrey Young and written by Robert Schlitt and adapted from the Richard ... Been Down So Long It Looks Like Up to... book by Richard ... A witty, psychedelic, and telling novel of the 1960s Richard Fari a evokes the Sixties as precisely, wittily, and poignantly as F. Scott Fitzgerald captured ... Been Down So Long It Looks Like Up to Me - Richard Farina Review: This is the ultimate novel of college life during the first hallucinatory flowering of what has famously come to be known as The Sixties. Been Down ... capism rehearsal quiz Flashcards Study with Quizlet and memorize flashcards containing terms like Reposition a product, Marketing a product, Scheduling promotion and more. Capsim Rehearsal Quiz Flashcards Study with Quizlet and memorize flashcards containing terms like Reposition a product, Marketing a product, Scheduling promotion and more. CAPSIM REHEARSAL QUIZ.docx CAPSIM REHEARSAL QUIZ Reposition a product : a)Research current customer buying criteria in the FastTrack b)Display the R&D worksheet c)Adjust Performance, ... Capsim Rehearsal Tutorial Quiz Answers.docx - 1-5 ... View Capsim Rehearsal Tutorial Quiz Answers.docx from STUDENT OL317 at Southern New Hampshire University. 1-5 Rehearsal Tutorial and Quiz in Capsim ... CAPSIM Tutorial 2: Rehearsal Tutorial - YouTube (DOCX) CAPSIM Rehearsal Quiz Tactics Action Steps Reposition a product Research current customer buying criteria in theÂ Courier Display the R&D worksheet Adjust Performance, Size, ... Introduction The quiz will ask you to match each basic tactic with a set of action steps. To complete the. Rehearsal, you must get 100% on the quiz, but you can take it as ... W01 Quiz - Capsim Rehearsal Rounds Self-Assessment On Studocu you find all the lecture notes, summaries and study guides you need to pass your exams with better grades. Cap Sim Quiz Online - Capsim Tutorials Introductory ... 1. Products are invented and revised by which department? · 2. What is the industry newsletter called? · 3. Which of these investments is not a function of the ... Introduction to Capsim Capstone Simulation - Practice Round 1