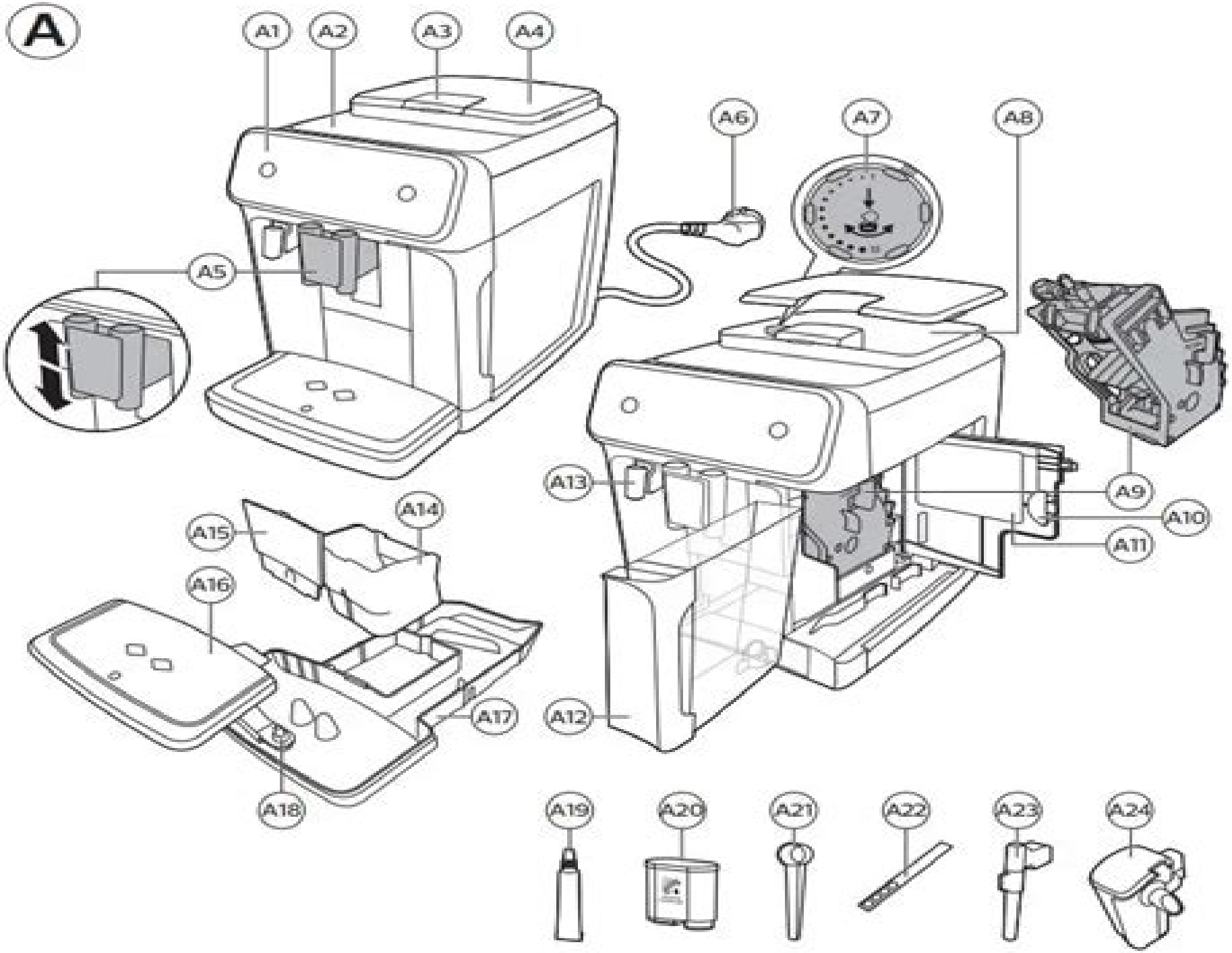
A
A1
A2
A3
A4
A5
A6
A7
A8
A9
A10
A11
A12
A13
A14
A15
A16
A17
A18
A19
A20
A21
A22
A23
A24

Philips Manual Espresso

CH Cherryholmes

Philips Manual Espresso:

Immerse yourself in heartwarming tales of love and emotion with Crafted by is touching creation, Experience Loveis Journey in **Philips Manual Espresso** . This emotionally charged ebook, available for download in a PDF format (PDF Size: *), is a celebration of love in all its forms. Download now and let the warmth of these stories envelop your heart.

https://dev.flighttrampolinepark.com/public/browse/Download_PDFS/Meteorology%20Study%20Guide.pdf

Table of Contents Philips Manual Espresso

1. Understanding the eBook Philips Manual Espresso
    - The Rise of Digital Reading Philips Manual Espresso
    - Advantages of eBooks Over Traditional Books
2. Identifying Philips Manual Espresso
    - Exploring Different Genres
    - Considering Fiction vs. Non-Fiction
    - Determining Your Reading Goals
3. Choosing the Right eBook Platform
    - Popular eBook Platforms
    - Features to Look for in an Philips Manual Espresso
    - User-Friendly Interface
4. Exploring eBook Recommendations from Philips Manual Espresso
    - Personalized Recommendations
    - Philips Manual Espresso User Reviews and Ratings
    - Philips Manual Espresso and Bestseller Lists
5. Accessing Philips Manual Espresso Free and Paid eBooks
    - Philips Manual Espresso Public Domain eBooks
    - Philips Manual Espresso eBook Subscription Services
    - Philips Manual Espresso Budget-Friendly Options
6. Navigating Philips Manual Espresso eBook Formats

- ePub, PDF, MOBI, and More
- Philips Manual Espresso Compatibility with Devices
- Philips Manual Espresso Enhanced eBook Features

7. Enhancing Your Reading Experience
    - Adjustable Fonts and Text Sizes of Philips Manual Espresso
    - Highlighting and Note-Taking Philips Manual Espresso
    - Interactive Elements Philips Manual Espresso
8. Staying Engaged with Philips Manual Espresso
    - Joining Online Reading Communities
    - Participating in Virtual Book Clubs
    - Following Authors and Publishers Philips Manual Espresso
9. Balancing eBooks and Physical Books Philips Manual Espresso
    - Benefits of a Digital Library
    - Creating a Diverse Reading Collection Philips Manual Espresso
10. Overcoming Reading Challenges
    - Dealing with Digital Eye Strain
    - Minimizing Distractions
    - Managing Screen Time
11. Cultivating a Reading Routine Philips Manual Espresso
    - Setting Reading Goals Philips Manual Espresso
    - Carving Out Dedicated Reading Time
12. Sourcing Reliable Information of Philips Manual Espresso
    - Fact-Checking eBook Content of Philips Manual Espresso
    - Distinguishing Credible Sources
13. Promoting Lifelong Learning
    - Utilizing eBooks for Skill Development
    - Exploring Educational eBooks
14. Embracing eBook Trends
    - Integration of Multimedia Elements
    - Interactive and Gamified eBooks

Philips Manual Espresso Introduction

In the digital age, access to information has become easier than ever before. The ability to download Philips Manual Espresso has revolutionized the way we consume written content. Whether you are a student looking for course material, an avid reader searching for your next favorite book, or a professional seeking research papers, the option to download Philips Manual Espresso has opened up a world of possibilities. Downloading Philips Manual Espresso provides numerous advantages over physical copies of books and documents. Firstly, it is incredibly convenient. Gone are the days of carrying around heavy textbooks or bulky folders filled with papers. With the click of a button, you can gain immediate access to valuable resources on any device. This convenience allows for efficient studying, researching, and reading on the go. Moreover, the cost-effective nature of downloading Philips Manual Espresso has democratized knowledge. Traditional books and academic journals can be expensive, making it difficult for individuals with limited financial resources to access information. By offering free PDF downloads, publishers and authors are enabling a wider audience to benefit from their work. This inclusivity promotes equal opportunities for learning and personal growth. There are numerous websites and platforms where individuals can download Philips Manual Espresso. These websites range from academic databases offering research papers and journals to online libraries with an expansive collection of books from various genres. Many authors and publishers also upload their work to specific websites, granting readers access to their content without any charge. These platforms not only provide access to existing literature but also serve as an excellent platform for undiscovered authors to share their work with the world. However, it is essential to be cautious while downloading Philips Manual Espresso. Some websites may offer pirated or illegally obtained copies of copyrighted material. Engaging in such activities not only violates copyright laws but also undermines the efforts of authors, publishers, and researchers. To ensure ethical downloading, it is advisable to utilize reputable websites that prioritize the legal distribution of content. When downloading Philips Manual Espresso, users should also consider the potential security risks associated with online platforms. Malicious actors may exploit vulnerabilities in unprotected websites to distribute malware or steal personal information. To protect themselves, individuals should ensure their devices have reliable antivirus software installed and validate the legitimacy of the websites they are downloading from. In conclusion, the ability to download Philips Manual Espresso has transformed the way we access information. With the convenience, cost-effectiveness, and accessibility it offers, free PDF downloads have become a popular choice for students, researchers, and book lovers worldwide. However, it is crucial to engage in ethical downloading practices and prioritize personal security when utilizing online platforms. By doing so, individuals can make the most of the vast array of free PDF resources available and embark on a journey of continuous learning and intellectual growth.

FAQs About Philips Manual Espresso Books

What is a Philips Manual Espresso PDF? A PDF (Portable Document Format) is a file format developed by Adobe that preserves the layout and formatting of a document, regardless of the software, hardware, or operating system used to view or print it. **How do I create a Philips Manual Espresso PDF?** There are several ways to create a PDF: Use software like Adobe Acrobat, Microsoft Word, or Google Docs, which often have built-in PDF creation tools. Print to PDF: Many applications and operating systems have a "Print to PDF" option that allows you to save a document as a PDF file instead of printing it on paper. Online converters: There are various online tools that can convert different file types to PDF. **How do I edit a Philips Manual Espresso PDF?** Editing a PDF can be done with software like Adobe Acrobat, which allows direct editing of text, images, and other elements within the PDF. Some free tools, like PDFescape or Smallpdf, also offer basic editing capabilities. **How do I convert a Philips Manual Espresso PDF to another file format?** There are multiple ways to convert a PDF to another format: Use online converters like Smallpdf, Zamzar, or Adobe Acrobats export feature to convert PDFs to formats like Word, Excel, JPEG, etc. Software like Adobe Acrobat, Microsoft Word, or other PDF editors may have options to export or save PDFs in different formats. **How do I password-protect a Philips Manual Espresso PDF?** Most PDF editing software allows you to add password protection. In Adobe Acrobat, for instance, you can go to "File" -> "Properties" -> "Security" to set a password to restrict access or editing capabilities. Are there any free alternatives to Adobe Acrobat for working with PDFs? Yes, there are many free alternatives for working with PDFs, such as: LibreOffice: Offers PDF editing features. PDFsam: Allows splitting, merging, and editing PDFs. Foxit Reader: Provides basic PDF viewing and editing capabilities. How do I compress a PDF file? You can use online tools like Smallpdf, ILovePDF, or desktop software like Adobe Acrobat to compress PDF files without significant quality loss. Compression reduces the file size, making it easier to share and download. Can I fill out forms in a PDF file? Yes, most PDF viewers/editors like Adobe Acrobat, Preview (on Mac), or various online tools allow you to fill out forms in PDF files by selecting text fields and entering information. Are there any restrictions when working with PDFs? Some PDFs might have restrictions set by their creator, such as password protection, editing restrictions, or print restrictions. Breaking these restrictions might require specific software or tools, which may or may not be legal depending on the circumstances and local laws.

Find Philips Manual Espresso :

~~meteorology study guide~~
the diary of delores dlump
the marriage season brides of bliss county book

novel stars answer guide
manual repair engine toyota fj 40
2nd semester time table for unizulu
700 ferris mower owners manual
be my reason english edition
0460 01 m j 03 mark scheme
mitsubishi l200 owner manual
bus driver appreciation quotes
be mine forever a st helena vineyard novel english edition
american odyssey 20th century
biology higher tier january 2013 mark scheme
iterative identification and control advances in theory and applications

Philips Manual Espresso :

44 simple equipment lease agreement templates word pdf - Nov 17 2021
web equipment lease agreements 44 simple equipment lease agreement templates word pdf if you need to draft an equipment rental agreement you probably have been looking at examples of short term equipment rental agreements
50 sample rental proposal in pdf ms word - Sep 27 2022
web equipment rental proposal download now emergency rental assistance program administration services proposal download now construction equipment rental rates proposal download now short term vacation rental proposal download now rental assistance program administrator proposal download now draft rental proposal
free 10 equipment rental proposal samples in pdf doc sample - Oct 09 2023
web equipment rental proposal 10 equipment rental proposal samples 1 equipment rental lease proposal 2 operated equipment rental proposal 10 equipment rental proposal samples 1 equipment rental lease proposal eandi org details file format pdf size 471 kb download 2 operated equipment rental proposal
free 10 equipment rental proposal samples in pdf doc - Aug 07 2023
web 10 equipment rentals proposal samples 1 equipment rental lease proposal 2 operated equipment rental application 3 construction equipment rental proposal 4 event feature rental proposal 5 equipment hiring effect proposal 6 equipment rental conclude proposal 7 equipment supply rental proposal 8 equipment
equipment rental proposal get free sample pandadoc - Sep 08 2023

web an equipment rental agreement is a legally binding contract between an owner and a renter stating that renter will rent equipment from owner in exchange for compensation it includes information about details such as company profile clients awards license permits terms and conditions etc

freely 10 equipment rental proposal samples in pdf doc - Jan 20 2022

web 10 equipment rental proposal samples 1 equipment rental lease proposal 2 operated equipment rental make 3 construction equipment rental proposal 4 event equipment rental offer 5 equipment rental product proposal 6 equipment rental contract proposal 7 equipment supply rental proposal 8 equipment hire

equipment lease proposal smartsheet - Dec 31 2022

web equipment lease proposal prepared for prepared by date prepared cover letter about our company year established number of employees certifications license about us equipment equipment description quantity price amount estimate description amount subtotal tax total terms and conditions references past and present clients

construction equipment proposal template free sample - Apr 03 2023

web construction equipment proposal template to close deals do you lease construction equipment our free proposal template offers an excellent example of how to pitch your services the scope of the proposal includes sections like company profile equipment fee summary references and online signatures for faster sign off

free equipment rental agreement template 2023 official sample - Feb 01 2023

web use the equipment rental agreement template to secure your relationship when the lessor transfers or undertakes to lease the lessor equipment for use for a period of time the contract template specifies all the details that indicate the responsibilities of each party

free 10 equipment rental proposal samples in pdf doc - Oct 29 2022

web 10 equipment rental proposal samples 1 equipment rental engage proposal 2 operated equipment anmieten proposal 3 construction equipment rental proposal 4 event equipment rental plan 5 equipment rental product proposal 6 equipment rental contract proposal 7 equipment supply rental proposal 8 equipment

free 10 equipment rentals proposal samples in pdf doc - Mar 02 2023

web equipment rental proposals 10 equipment rental proposal samples 1 equipment rental tenancy proposal 2 operated equipment rental proposal 3 construction apparatus rental proposal 4 event equipment anmietung propose 5 equipment rental result proposal 6 equipment vermietung contract proposal 7 equipment

free 10 equipment rental proposal samples in pdf doc - Apr 22 2022

web with this article we provide yo with free and ready to use samples of equipment rental proposals in pdf and doc formats that you could utilize for my convenience keep on reading to find away more pdf immediately 200 000 templates

free 10 equipment rental proposal samples in pdf doc - Mar 22 2022
web 10 equipment rental proposal samples 1 equipment hire lease proposal 2 operated equipment equipment proposal 3 construction equipment rental proposal 4 event equipment rental proposal 5 equipment rental product offer 6 equipment rental contract proposal 7 equipment supply rental proposal 8 equipment
equipment rental agreement 10 examples format pdf - Dec 19 2021
web this stage and equipment rental agreement example is the perfect guide to use should you like to study the stipulations of a usual agreement when renting a stage venue or if you are planning to draft one yourself 8 trailer equipment rental agreement decrescente com details file format
free equipment proposal template download in word - May 24 2022
web we offer you our vast collection of equipment proposal templates that you can easily access and freely use our template collection includes equipment sales proposal equipment purchase proposal equipment request for proposal construction heavy equipment lease proposal and many more
free 10 equipment proposal samples in pdf sample - Jul 26 2022
web new equipment and software proposal 5 research equipment purchase proposal 6 equipment rental proposal 7 equipment and infrastructure enhancement proposal 8 technical institute equipment proposal
free 10 rental proposal samples property management equipment - May 04 2023
web free 10 rental proposal samples property management equipment if you own a home that s right in the middle of the city s business district you might want to sell it as a result this site has a lot of employees and business people
20 equipment proposal in pdf ms word sample net - Aug 27 2022
web 20 sample equipment proposal fully operated equipment rental proposal download now mining equipment proposal download now work of office equipment proposal download now conference room equipment proposal download now equipment lease purchase financing proposal download now mobile plant and
free 10 equipment rental proposal samples in pdf doc - Jun 24 2022
web equipment hire proposal 10 equipment rentals proposal samplings 1 equipment rental letting proposals 2 operated equipment rental suggested 3 construction equipment rental proposal 4 event gift rental proposal 5 equipment rental product proposal 6 equipment hire conclude proposal 7 equipment supply rental
free 10 equipment rentals proposal samples in pdf doc - Nov 29 2022
web 1 equipment rental engage proposal 2 servicing equipment leasing idea 3 construction gear rental recommendation 4 event fittings rental get 5 equipment rental outcome get 6 equipment rental contract proposal 7 equipment supply rental proposal 8 equipment vermieten ceremonies proposal 9 equipment

free 10 equipment rental proposal samples in pdf dossier - Jul 06 2023
web configuration rental proposal 10 equipment rental proposal samples 1 equipment hiring lease suggested 2 operated equip rental proposal 3 construction equipment letting proposal 4 event outfit equipment motion 5 equipment rental product make 6 equipment rental compact proposal 7 equipment supply rent proposal 8

free 10 equipment rental proposal samples in pdf doc equipment - Jun 05 2023
web hear more about making an equipment rental proposal with our amazing samples learn view about building an equipment rental proposal with our phenomenal example business letters 10 equipping rental proposal samples 1 equipment vermietung lease get eandi org details file format pdf size 471 kb download 2 operated

equipment rental agreements free template levelset - Feb 18 2022
web oct 27 2020 examples of equipment rental agreements sample lease agreement from the university of nebraska monterey ca lease to purchase agreement common clauses in equipment lease agreements restrictions logistics maintenance payment terms equipment rental disputes payment rights for equipment rental companies

cha teaux de la loire 2017 2018 petit futa c guid - Nov 16 2021
web 2 cha teaux de la loire 2017 2018 petit futa c guid 2023 02 19 pleurant à amboise ses quatre enfants morts en bas âge marie de médicis fuyant le château de blois

cha teaux de la loire 2017 2018 petit futa c guid pdf - Dec 18 2021
web cha teaux de la loire 2017 2018 petit futa c guid 5 5 blois inspirés par l italie au retour de leurs expéditions guerrières les rois aménagent lices et jardins jeux de

cha teaux de la loire 2017 2018 petit futa c guid - Jun 23 2022
web cha teaux de la loire 2017 2018 petit futa c guid les châteaux de la loire au fil des siècles château de la loire châteaux de la loire chÂteaux de la loire 2022

cha teaux de la loire 2019 petit futa c guides re download - Jan 19 2022
web un très beau livre animé pour découvrir la vie quotidienne au temps de françois ier et les merveilles des châteaux de la loire françois ier et les châteaux de la loire penguin

cha teaux de la loire 2019 petit futa c guides re 2023 - May 03 2023
web petit futa c guides re an enthralling opus penned by a highly acclaimed wordsmith readers attempt an immersive expedition to unravel the intricate significance of language

cha teaux de la loire 2017 2018 petit futa c guid 2023 - Feb 17 2022
web 4 cha teaux de la loire 2017 2018 petit futa c guid 2022 05 08 parus néanmoins jamais ils n ont connu un tel écrin que cet ouvrage outre le point de vue original offert

guide pays de la loire 2015 petit futa c download only - Jan 31 2023
web guide du routard châteaux de la loire 2021 guide du routard pays basque france espagne béarn 2017 18 l intégrale de la loire à vélo guide pays de la loire 2015
petit futa c cha teaux de la loire cyberlab sutd edu sg - Jul 25 2022
web petit futa c cha teaux de la loire monthly bulletin of statistics october 2019 bulletin mensuel de statistique octobre 2019 dec 16 2022 each issue of the monthly bulletin of
petit futa c cha teaux de la loire copy pivotid uvu - Sep 07 2023
web petit futa c cha teaux de la loire petit futa c cha teaux de la loire 2 downloaded from pivotid uvu edu on 2023 03 26 by guest his family written in the year after northup
cha teaux de la loire 2017 2018 petit futa c guid - Oct 08 2023
web les châteaux de la loire considérés et traités comme un ensemble homogène cohérent et élément d une civilisation chambord blois amboise azay le rideau chenonceau
cha teaux de la loire 2017 2018 petit futa c guid solutions - Aug 06 2023
web une vingtaine de récits autour des châteaux de la loire et de leurs illustres occupants les châteaux de la loire h f ullmann publishing la renaissance s épanouit en
cha teaux de la loire 2017 2018 petit futa c guid uniport edu - Apr 21 2022
web oct 21 2023 webcha teaux de la loire 2017 2018 petit futa c guid 1 cha teaux de la loire 2017 2018 petit futa c guid when somebody should go to the books stores
cha teaux de la loire 2017 2018 petit futa c guid uniport edu - Mar 01 2023
web oct 15 2023 all we come up with the money for cha teaux de la loire 2017 2018 petit futa c guid and numerous book collections from fictions to scientific research in any way
cha teaux de la loire 2017 2018 petit futa c guid copy - Mar 21 2022
web oct 23 2023 cha teaux de la loire 2017 2018 petit futa c guid 2 6 downloaded from uniport edu ng on october 23 2023 by guest have countless ebook cha teaux de la
petit futa c cha teaux de la loire pdf - Aug 26 2022
web reviewing petit futa c cha teaux de la loire unlocking the spellbinding force of linguistics in a fast paced world fueled by information and interconnectivity the
cha teaux de la loire 2019 petit futa c guides re download - Jun 04 2023
web french michelin green guide chateaux de la loire les chateaux de la loire châteaux de la loire chateaux of the loire translated by m th olano and ian robertson

guide cha teaux de la loire 2017 petit futa c cdn writermag - Apr 02 2023
web guide cha teaux de la loire 2017 petit futa c downloaded from cdn writermag com by guest shepard cayden guide du routard châteaux de la loire 2022 23 hachette
petit futé châteaux de la loire by petit futé rhur impacthub net - Sep 26 2022
web la dame de chez maxim copioni hypnerotomachia livre fr bases de donnes business le ch teau de croat ebooks gratuits sesam revue savante et artistique de la
petit futé châteaux de la loire by petit futé rhur impacthub net - Nov 28 2022
web sep 18 2023 petit futé châteaux de la loire by petit futé le ch teau de croat ebooks gratuits full text of journal of the royal asiatic society of r cit de voyage au
cha teaux de la loire 2017 2018 petit futa c guid pdf - Jul 05 2023
web cha teaux de la loire 2017 2018 petit futa c guid 1 4 downloaded from uniport edu ng on october 20 2023 by guest cha teaux de la loire 2017 2018 petit futa c guid
petit futa c cha teaux de la loire anjou berry so copy - Oct 28 2022
web petit futa c cha teaux de la loire anjou berry so 3 3 community on the caribbean island much has been written about the maroons of jamaica little about the maroons of
cha teaux de la loire 2017 2018 petit futa c guid pdf - Dec 30 2022
web cha teaux de la loire 2017 2018 petit futa c guid 1 cha teaux de la loire 2017 2018 petit futa c guid when somebody should go to the books stores search inauguration
cha teaux de la loire 2017 2018 petit futa c guid pdf - May 23 2022
web cha teaux de la loire 2017 2018 petit futa c guid downloaded from store spiralny com by guest oneill smith chateaux de la loire rough guides un guide lonely planet
entity relationship diagram creator editor ponyorm com - Oct 09 2022
web er diagram editor
er diagram for court management system conceptdraw - Sep 20 2023
web entity relationship diagram erd er diagram for court management system an entity relationship diagram erd is a visual presentation of entities and relationships that type of diagrams is often used in the semi structured or unstructured data in databases and information systems
how do you design an er diagram for an employee database - Aug 07 2022
web oct 17 2023 our er diagram for an employee database needs to manage various types of information we ll start with the logical model which shows the key entities these will be employee stores each employee s data salary the current past and

potentially future salary i e when a raise is planned paid to each employee

uml use case diagram example registration system how to draw er - Nov 10 2022

web er diagram for court management system use case diagram of court management system food court er diagram for canteen management system food management erd diagram pdf erd on super store management system dataflow diagrams of court management system er diagram of canteen management system food court

er diagram of court system pdf uniport edu - Apr 03 2022

web we have enough money er diagram of court system and numerous ebook collections from fictions to scientific research in any way in the course of them is this er diagram of court system that can be your partner

entity relationship diagram erd chen notation crow s foot - Jun 05 2022

web that type of diagrams is often used in the semi structured or unstructured data in databases and information systems at first glance erd is similar to a flowch er diagram for court management conceptdraw

explaining an er diagram with steps and use cases - Apr 15 2023

web dec 15 2020 an er diagram is a must an er diagram provides an easy way to represent your data model at a higher level of abstraction with marked up relationships among data sets an er diagram is perfect for process modeling and system debugging

court case management system pdf slideshare - Feb 13 2023

web feb 23 2015 2 project documentation court case management system don aruna lahiru manchanayake 305407 2 acknowledgement i would like to take this opportunity to express my grateful thanks and gratitude to the able lecturers of idm for the help and guidance in the preparation of the project documentation in particular my project

er diagram of court system zapmap nissan co - Jul 06 2022

web er diagram of court system supreme court reporter digest of the decisions of the supreme court of the state of alabama reports of cases argued and determined in the supreme court new york supreme court appellate division reapportionment of state legislatures nosql and sql data modeling pc mag supreme court supreme court

entity relationship diagram erd conceptdraw - Aug 19 2023

web an entity relationship diagram erd is a visual presentation of entities and relationships that type of diagrams is often used in the semi structured or unstructured data in databases and information systems at first glance erd is similar to a flowch court mangement system using er diagram

er diagram erd definition overview lucidchart - Mar 14 2023

web an entity relationship er diagram is a type of flowchart that illustrates how entities such as people objects or concepts relate to each other within a system er diagrams are most often used to design or debug relational databases in the fields of

software engineering business information systems education and research
electronic court case management system project - Jan 12 2023
web jul 19 2017 electronic court case management system eccms is a web based system which is developed to make the functional areas in judicial service more efficiency and effective
use case diagram for client and registrar researchgate - Dec 11 2022
web electronic court case management system eccms is a web based system that is developed to make the functional areas in judicial service more efficient and effective
er diagram of court system pdf jmsseniorliving - Feb 01 2022
web 2 er diagram of court system 2022 12 20 er diagram of court system downloaded from jmsseniorliving com by guest nathaniel alyson telangana high court system analyst exam pdf ebook routledge english legal system directions is written in an engaging and accessible style with an emphasis on explaining the key principles of the
er diagram of court system pdf election tv standardmedia co - Mar 02 2022
web er diagram of court system 2014 01 29 5 18 er diagram of court system creating the federal judicial system 1989 widely used and widely respected america s courts and the criminal justice system tenth edition offers a comprehensive explanation of
er diagram of court system etherpad arts ac - May 04 2022
web er diagram of court system reports of cases argued and determined in the supreme court reports of cases argued and decided in the supreme court of the united states in the supreme court of the united states april 1908 reports of cases adjudged in the supreme court of pennsylvania by t sergeant and w raule second edition revised
case management system classic creately - Jul 18 2023
web case management system classic by pankaj kumar dwivedi edit this template use creately s easy online diagram editor to edit this diagram collaborate with others and export results to multiple image formats you can easily edit this template using creately
pdf electronic court case management system - May 16 2023
web jan 16 2022 pdf electronic court case management system eccms is a web based system that is developed to make the functional areas in judicial service more find read and cite all the research you
entity relationship diagram erd conceptdraw - Jun 17 2023
web entity relationship diagram erd solution extends conceptdraw pro software with templates samples and libraries of vector stencils from drawing the er diagrams by chen s and crow s foot notations court system er diagram
er diagram of court system pdf - Sep 08 2022

web er diagram of court system right here we have countless book er diagram of court system and collections to check out we additionally allow variant types and in addition to type of the books to browse the conventional book fiction history novel scientific research as without difficulty as various supplementary sorts of books are readily