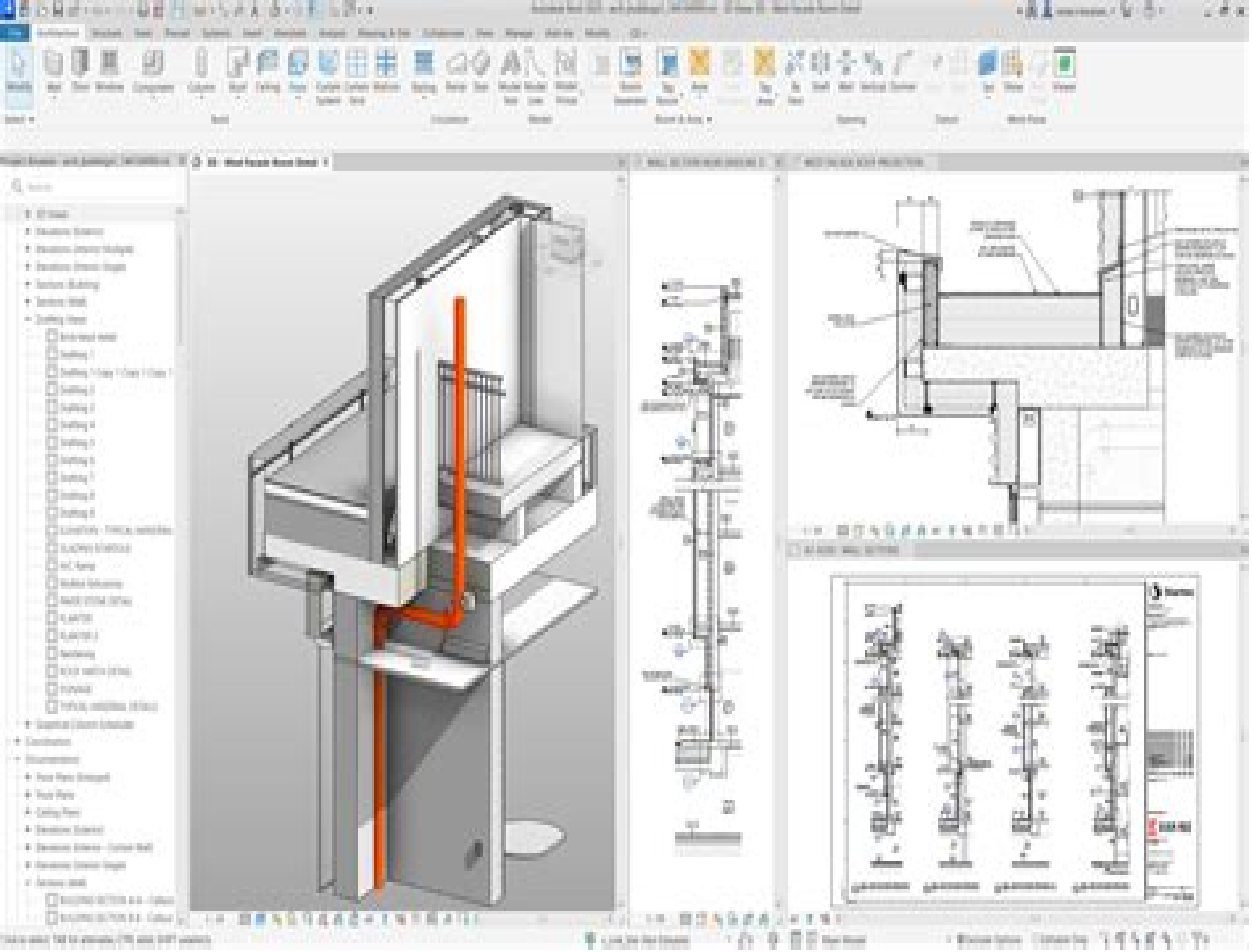

2014 Revit Manual

Brendan G. Carr

2014 Revit Manual:

Advanced Modelling Techniques in Structural Design Feng Fu,2015-03-26 The successful design and construction of iconic new buildings relies on a range of advanced technologies in particular on advanced modelling techniques In response to the increasingly complex buildings demanded by clients and architects structural engineers have developed a range of sophisticated modelling software to carry out the necessary structural analysis and design work Advanced Modelling Techniques in Structural Design introduces numerical analysis methods to both students and design practitioners It illustrates the modelling techniques used to solve structural design problems covering most of the issues that an engineer might face including lateral stability design of tall buildings earthquake progressive collapse fire blast and vibration analysis non linear geometric analysis and buckling analysis Resolution of these design problems are demonstrated using a range of prestigious projects around the world including the Buji Khalifa Willis Towers Taipei 101 the Gherkin Millennium Bridge Millau viaduct and the Forth Bridge illustrating the practical steps required to begin a modelling exercise and showing how to select appropriate software tools to address specific design problems **Building Information Modeling** André Borrmann,Markus König,Christian Koch,Jakob Beetz,2018-09-19 Building Information Modeling BIM refers to the consistent and continuous use of digital information throughout the entire lifecycle of a built facility including its design construction and operation In order to exploit BIM methods to their full potential a fundamental grasp of their key principles and applications is essential Accordingly this book combines discussions of theoretical foundations with reports from the industry on currently applied best practices The book s content is divided into six parts Part I discusses the technological basics of BIM and addresses computational methods for the geometric and semantic modeling of buildings as well as methods for process modeling Next Part II covers the important aspect of the interoperability of BIM software products and describes in detail the standardized data format Industry Foundation Classes It presents the different classification systems discusses the data format CityGML for describing 3D city models and COBie for handing over data to clients and also provides an overview of BIM programming tools and interfaces Part III is dedicated to the philosophy organization and technical implementation of BIM based collaboration and discusses the impact on legal issues including construction contracts In turn Part IV covers a wide range of BIM use cases in the different lifecycle phases of a built facility including the use of BIM for design coordination structural analysis energy analysis code compliance checking quantity take off prefabrication progress monitoring and operation In Part V a number of design and construction companies report on the current state of BIM adoption in connection with actual BIM projects and discuss the approach pursued for the shift toward BIM including the hurdles taken Lastly Part VI summarizes the book s content and provides an outlook on future developments The book was written both for professionals using or programming such tools and for students in Architecture and Construction Engineering programs *Landscape Architecture and Digital Technologies* Jillian Walliss,Heike Rahmann,2016-02-12

Landscape Architecture and Digital Technologies explores how digital technologies are reshaping design and making in landscape architecture While the potentials of digital technologies are well documented within landscape planning and visualisation their application within design practice is far less understood This book highlights the role of the digital model in encouraging a new design logic that moves from the privileging of the visual to a focus on processes of formation bridging the interface of the conceptual and material the virtual and the physical Drawing on interviews and projects from a range of international designers including Sn hetta Arup Gustafson Porter ASPECT Studios Grant Associates Catherine Mosbach Philippe Rahm PARKKIM LAAC and PEG office of landscape architecture among others the authors explore the influence of parametric modelling scripting real time data simulation prototyping fabrication and Building Information Modelling on the design and construction of contemporary landscapes This engagement with practice is expanded through critical reflection from academics involved in landscape architecture programs around the world that are reshaping their research and pedagogy to reflect an expanded digital realm Crossing critical theory technology and contemporary design the book constructs a picture of an emerging twenty first century practice of landscape architecture practice premised on complexity and performance It also highlights the disciplinary demands and challenges in engaging with a rapidly evolving digital context within practice and education The book is of immense value to professionals and researchers and is a key publication for digital landscape courses at all levels *BIM Handbook* Rafael Sacks,Charles Eastman,Ghang Lee,Paul Teicholz,2018-08-14 Discover BIM A better way to build better buildings Building Information Modeling BIM offers a novel approach to design construction and facility management in which a digital representation of the building product and process is used to facilitate the exchange and interoperability of information in digital format BIM is beginning to change the way buildings look the way they function and the ways in which they are designed and built The BIM Handbook Third Edition provides an in depth understanding of BIM technologies the business and organizational issues associated with its implementation and the profound advantages that effective use of BIM can provide to all members of a project team Updates to this edition include Information on the ways in which professionals should use BIM to gain maximum value New topics such as collaborative working national and major construction clients BIM standards and guides A discussion on how various professional roles have expanded through the widespread use and the new avenues of BIM practices and services A wealth of new case studies that clearly illustrate exactly how BIM is applied in a wide variety of conditions Painting a colorful and thorough picture of the state of the art in building information modeling the BIM Handbook Third Edition guides readers to successful implementations helping them to avoid needless frustration and costs and take full advantage of this paradigm shifting approach to construct better buildings that consume fewer materials and require less time labor and capital resources **Learning Autodesk Revit 2015** Kristen Smith,Victoria Shipley,2014-05-01 Learning Revit 2015 is uniquely designed to be an effective learning tool in both self paced and classroom environments This courseware will take you

through the essential areas of Autodesk Revit which will enable you to master the tools needed to efficiently create and document a BIM model The content is organized in such a way that it intuitively guides you through the design process In each lesson you learn about the design process or tool the steps required to be successful and then an exercise that walks you through those steps and options so you experience it in a real world design scenario After you master the essential aspects of Revit the book then becomes a valuable desktop reference enabling you to dive deeper into the concepts processes and tools that will make you more productive The information covered in this manual is written for Autodesk Revit or Autodesk Revit Architecture and is also applicable when working in Autodesk Revit MEP and Autodesk Revit Structure

Handbook of Research on Emerging Digital Tools for Architectural Surveying, Modeling, and Representation Brusaporci, Stefano,2015-07-13 Technological revolutions have changed the field of architecture exponentially The advent of new technologies and digital tools will continue to advance the work of architects globally aiding in architectural design planning implementation and restoration The Handbook of Research on Emerging Digital Tools for Architectural Surveying Modeling and Representation presents expansive coverage on the latest trends and digital solutions being applied to architectural heritage Spanning two volumes of research based content this publication is an all encompassing reference source for scholars IT professionals engineers architects and business managers interested in current methodologies concepts and instruments being used in the field of architecture **Architecture and Design: Breakthroughs in Research and Practice** Management Association, Information Resources,2018-11-02 Technological evolutions have changed the field of architecture exponentially leading to more stable and energy efficient building structures Architects and engineers must be prepared to further enhance their knowledge in the field in order to effectively meet new and advancing standards Architecture and Design Breakthroughs in Research and Practice is an authoritative resource for the latest research on the application of new technologies and digital tools that revolutionize the work of architects globally aiding in architectural design planning implementation and restoration Highlighting a range of pertinent topics such as design anthropology digital preservation and 3D modeling this publication is an ideal reference source for researchers scholars IT professionals engineers architects contractors and academicians seeking current research on the development and creation of architectural design Building Information Modelling (BIM) in Design, Construction and Operations L. Mahdjoubi,C.A. Brebbia,R. Laing,2015-09-09 Building Information Modelling BIM in Design Construction and Operations contains the proceedings of the first in a planned series of conferences dealing with design coordination construction maintenance operation and decommissioning The book gives details of how BIM tools and techniques have fundamentally altered the manner in which modern construction teams operate the processes through which designs are evolved and the relationships between conceptual detail construction and life cycle stages The papers contributed by experts from industry practice and academia debate key topics develop innovative solutions and predict future trends The interdisciplinary nature of the

contents and the collaborative practices discussed so important within the built environment will appeal to those engaged in design surveying visualisation infrastructure real estate construction law insurance and facilities management Topics covered include BIM in design coordination BIM in construction operations BIM in building operation and maintenance BIM and sustainability BIM and collaborative working and practices BIM health and safety and BIM facilities management integration among others **Design Integration Using Autodesk Revit 2014** Daniel John Stine,2013 Design Integration Using Autodesk Revit 2014 is designed to provide the reader with a well rounded knowledge of Autodesk Revit tools and techniques All three flavors of the Revit platform are introduced in this textbook This approach gives the reader a broad overview of the Building Information Modeling BIM process The topics cover the design integration of most of the building disciplines Architectural Interior Design Structural Mechanical Plumbing and Electrical Civil is not covered but adding topography to your model is Each book comes with a CD containing numerous video presentations of the written material Throughout the book the student develops a two story law office The drawings start with the floor plans and develop all the way to photo realistic renderings similar to the one on the cover of this book Along the way the building s structure ductwork plumbing and electrical power and lighting are modeled By the end the reader will a have thorough knowledge of many of the Revit basics needed to be productive in a classroom or office environment Even if you will only be working with one component of Revit in your chosen profession this book will give you important knowledge on how the other disciplines will be doing their work and valuable insight into the overall process As an instructor the author understands that many students in a classroom setting have varying degrees of computer experience To help level the playing field the first chapter is devoted to an introduction to computers Much of the basics are covered from computer hardware and software to file management procedures including step by step instructions on using a flash drive Chapters 2 through 5 cover many of the Revit basics needed to successfully and efficiently work in the software Once the fundamentals are covered the remaining chapters walk the reader through a building project which is started from scratch so nothing is taken for granted by the reader or the author Autodesk Revit Architecture 2014 Eric Wing,2013-05-17 Learn Revit Architecture with an engaging real world continuous step by step tutorial This Autodesk Official Press book helps you become proficient with Autodesk s popular building information modeling software using an innovative continuous tutorial It covers each phase of designing documenting and presenting a four story office building a real world project you might expect to encounter on the job Concise explanations focused examples step by step instructions and an engaging hands on tutorial make this Autodesk Official Press guide the perfect way to learn Revit Architecture Expert author Eric Wing first introduces the interface and Revit conventions and then moves directly into building modeling You ll learn to place walls doors and windows work with structural grids beams and foundations add text and dimensions and use dimensions as a design tool As the building takes shape you ll discover how to generate construction documentation create schedules consider site issues and use Revit s

rendering capabilities Shows you how to work on a real world design from start to finish Helps you to understand industry best practices and quickly become proficient with the user interface Explains how to effectively plan and create walls doors window floors and ceilings Details ways to create professional stairs and railings Walks you through using Revit s powerful dimensions families worksets worksharing and phase management features vEncourages you to show off your design with beautifully lit fully rendered 3D scenes Autodesk Revit Architecture No Experience Required features downloadable tutorial files so you can jump in at any exercise It s the perfect resource for learning this essential BIM software **Revit Essentials for Beginners** Ken Jolly,2014-03-26 Beginning a new software is never easy however we have created an instruction manual to assist you with the essentials when beginning to use Revit for your Design Work Revit enables you to quickly create Schematic Designs expand these into Construction Documentation and use powerful 3D drawings for your presentations This manual triages the information so you receive the information as needed for your understanding of the software Whether working individually or as a member of a team this information will start your progress **Revit Architecture 2014 for Designers** Douglas R. Seidler,2013-10-10 Building information modeling BIM is the new AutoCAD for architects and interior designers and Revit Architecture is the leading software package in the BIM marketplace Revit Architecture 2014 for Designers is written specifically for architects and interior designers as they transition from CAD to BIM Beginning with the building blocks of BIM modeling walls windows and doors the text progresses through dynamically generated 2 dimensional and 3 dimensional views to advanced features such as photorealistic rendering custom title blocks and exporting drawings to AutoCAD and SketchUp Instructions are fully illustrated creating a smooth transition to the BIM environment for all designers Clear concise and above all visual this is the essential Revit guide written specifically for interior designers and architects Publisher s website **Autodesk Revit Architecture 2014 Essentials** Ryan Duell,Tobias Hathorn,Tessa Reist Hathorn,2013-04-10 Quickly learn essential Revit Architecture tools and techniques Autodesk Revit Architecture is the powerful sophisticated building information modeling BIM software that has transformed the architectural design industry This Autodesk Official Press guide is the perfect introduction to the powerful software for architects designers and students Three Revit experts provide concise explanations real world examples and plenty of hands on exercises and tutorials You ll soon master the basics and then find yourself using the software confidently productively and effectively Beginners will get comfortable with Revit s core features and functions Current users will have a valuable reference to refresh and hone their skills And everyone can use this practical book to help prepare for the Revit Architecture certification exams Gets readers up and running on Autodesk Revit Architecture 2014 Autodesk s industry leading building information modeling software Explains core Revit tools features functionality real world workflows and BIM concepts Covers schematic design modeling families views creating drawing sets and more Features best practices rendering and visualization worksharing documentation and annotation Provides downloadable starting and ending files so readers can

compare their work to that of the pro s Autodesk Revit Architecture 2014 Essentials is your perfect introduction toto the powerful industry leading BIM software Mastering Autodesk Revit MEP 2014 Don Bokmiller,Simon Whitbread,Plamen Hristov,2013-05-30 The ultimate reference and tutorial to harness the power of Revit MEP This Autodesk Official Press book will help you develop your expertise with Revit MEP s core concepts and functionality Based on the authors years of real world experience this comprehensive reference and tutorial has been updated to cover all of the new features of Revit MEP and includes best practices techniques tips tricks and real world exercises to help you hone your skills Shows how to use the interface effectively explains how to create and use project templates and details ways you can improve efficiency with worksharing and collaboration Addresses generating schedules that show quantities materials design dependencies and more Looks at creating logical air water and fire protection systems evaluating building loads and placing air and water distribution equipment Covers lighting power receptacles and equipment communication outlets and systems and circuiting and panels Zeroes in on creating water systems plumbing fixtures and their connectors water piping and more Featuring real world scenarios and hands on tutorials this Autodesk Official Press book features downloadable before and after tutorial files so that you can compare your finished work to that of the professionals It s the perfect resource for becoming a Revit MEP expert **Mastering Autodesk Revit Architecture 2014** James Vandezande,Eddy Krygiel,Phil Read,2013-05-15 Learn Revit Architecture with expert instruction from this Autodesk Official Press guide The new edition of this bestselling Revit book is the most useful and approachable Mastering Revit Architecture yet Thoroughly revised and updated this comprehensive guide to Autodesk s industry leading building information modeling BIM software features in depth explanations real world examples and practical tutorials help you grasp crucial tools techniques and concepts so you can quickly start doing real work in Revit You will learn core BIM concepts and best practices for everything from putting together impressive building designs to producing solid documentation creating visualizations that impress clients and more Hands on exercises with downloadable before and after files provide plenty of opportunities to practice the real world scenarios and hone all the crucial Revit skills Explains the user interface general concepts best practices and new features of Revit 2014 Teaches modeling massing and visualization with Revit Helps users develop extended modeling skills for walls stairs floors and more Features detailed documentation and presentation techniques Provides detailed instruction step by step tutorials and numerous examples Includes downloadable starting and ending files and additional advanced content Offers information to help readers prepare for Autodesk s certification exams This detailed reference and tutorial is the perfect resource for becoming an expert with Autodesk s powerful BIM software **Autodesk Revit Basics Training Manual** Brian W. Clayton,2017-10-15 Resource added for the Architectural Technology program 106141 **Poor's Financial Records** ,1933 Consulting-specifying Engineer ,2008 Autodesk Revit Structure 2014 Fundamentals ASCENT Center for Technical Knowledge,2013 **Revit Architecture 2014 Basics** Elise Moss,2013 Autodesk Revit 2014

Basics for Architectural Design is geared towards beginning architectural students or professional architects who want to get a jump start into 3D parametric modeling for commercial structures This book is filled with tutorials tips and tricks and will help you get the most out of your software in very little time The text walks you through from concepts to site plans to floor plans and on through reflected ceiling plans then ends with an easy chapter on how to customize Autodesk Revit to boost your productivity The advantages of working in 3D are not initially apparent to most architectural users The benefits come when you start creating your documentation and you realize that your views are automatically defined for you with your 3D model Your schedules and views automatically update when you change features You can explore your conceptual designs faster and in more depth Learning to use Autodesk Revit will not make you a better architect However it will allow you to communicate your ideas and designs faster easier and more beautifully

Embark on a transformative journey with is captivating work, **2014 Revit Manual** . This enlightening ebook, available for download in a convenient PDF format Download in PDF: , invites you to explore a world of boundless knowledge. Unleash your intellectual curiosity and discover the power of words as you dive into this riveting creation. Download now and elevate your reading experience to new heights .

https://dev.flighttrampolinepark.com/results/book-search/HomePages/nutrition%20and%20physical%20activity%20in%20inflammatory%20diseases.pdf

Table of Contents 2014 Revit Manual

1. Understanding the eBook 2014 Revit Manual
    - The Rise of Digital Reading 2014 Revit Manual
    - Advantages of eBooks Over Traditional Books
2. Identifying 2014 Revit Manual
    - Exploring Different Genres
    - Considering Fiction vs. Non-Fiction
    - Determining Your Reading Goals
3. Choosing the Right eBook Platform
    - Popular eBook Platforms
    - Features to Look for in an 2014 Revit Manual
    - User-Friendly Interface
4. Exploring eBook Recommendations from 2014 Revit Manual
    - Personalized Recommendations
    - 2014 Revit Manual User Reviews and Ratings
    - 2014 Revit Manual and Bestseller Lists
5. Accessing 2014 Revit Manual Free and Paid eBooks
    - 2014 Revit Manual Public Domain eBooks
    - 2014 Revit Manual eBook Subscription Services

    - 2014 Revit Manual Budget-Friendly Options
6. Navigating 2014 Revit Manual eBook Formats
    - ePub, PDF, MOBI, and More
    - 2014 Revit Manual Compatibility with Devices
    - 2014 Revit Manual Enhanced eBook Features
7. Enhancing Your Reading Experience
    - Adjustable Fonts and Text Sizes of 2014 Revit Manual
    - Highlighting and Note-Taking 2014 Revit Manual
    - Interactive Elements 2014 Revit Manual
8. Staying Engaged with 2014 Revit Manual
    - Joining Online Reading Communities
    - Participating in Virtual Book Clubs
    - Following Authors and Publishers 2014 Revit Manual
9. Balancing eBooks and Physical Books 2014 Revit Manual
    - Benefits of a Digital Library
    - Creating a Diverse Reading Collection 2014 Revit Manual
10. Overcoming Reading Challenges
    - Dealing with Digital Eye Strain
    - Minimizing Distractions
    - Managing Screen Time
11. Cultivating a Reading Routine 2014 Revit Manual
    - Setting Reading Goals 2014 Revit Manual
    - Carving Out Dedicated Reading Time
12. Sourcing Reliable Information of 2014 Revit Manual
    - Fact-Checking eBook Content of 2014 Revit Manual
    - Distinguishing Credible Sources
13. Promoting Lifelong Learning
    - Utilizing eBooks for Skill Development
    - Exploring Educational eBooks
14. Embracing eBook Trends

- Integration of Multimedia Elements
- Interactive and Gamified eBooks

2014 Revit Manual Introduction

Free PDF Books and Manuals for Download: Unlocking Knowledge at Your Fingertips In todays fast-paced digital age, obtaining valuable knowledge has become easier than ever. Thanks to the internet, a vast array of books and manuals are now available for free download in PDF format. Whether you are a student, professional, or simply an avid reader, this treasure trove of downloadable resources offers a wealth of information, conveniently accessible anytime, anywhere. The advent of online libraries and platforms dedicated to sharing knowledge has revolutionized the way we consume information. No longer confined to physical libraries or bookstores, readers can now access an extensive collection of digital books and manuals with just a few clicks. These resources, available in PDF, Microsoft Word, and PowerPoint formats, cater to a wide range of interests, including literature, technology, science, history, and much more. One notable platform where you can explore and download free 2014 Revit Manual PDF books and manuals is the internets largest free library. Hosted online, this catalog compiles a vast assortment of documents, making it a veritable goldmine of knowledge. With its easy-to-use website interface and customizable PDF generator, this platform offers a user-friendly experience, allowing individuals to effortlessly navigate and access the information they seek. The availability of free PDF books and manuals on this platform demonstrates its commitment to democratizing education and empowering individuals with the tools needed to succeed in their chosen fields. It allows anyone, regardless of their background or financial limitations, to expand their horizons and gain insights from experts in various disciplines. One of the most significant advantages of downloading PDF books and manuals lies in their portability. Unlike physical copies, digital books can be stored and carried on a single device, such as a tablet or smartphone, saving valuable space and weight. This convenience makes it possible for readers to have their entire library at their fingertips, whether they are commuting, traveling, or simply enjoying a lazy afternoon at home. Additionally, digital files are easily searchable, enabling readers to locate specific information within seconds. With a few keystrokes, users can search for keywords, topics, or phrases, making research and finding relevant information a breeze. This efficiency saves time and effort, streamlining the learning process and allowing individuals to focus on extracting the information they need. Furthermore, the availability of free PDF books and manuals fosters a culture of continuous learning. By removing financial barriers, more people can access educational resources and pursue lifelong learning, contributing to personal growth and professional development. This democratization of knowledge promotes intellectual curiosity and empowers individuals to become lifelong learners, promoting progress and innovation in various fields. It is worth noting that while accessing free 2014 Revit Manual PDF books and manuals is convenient and cost-effective, it is vital to respect copyright

laws and intellectual property rights. Platforms offering free downloads often operate within legal boundaries, ensuring that the materials they provide are either in the public domain or authorized for distribution. By adhering to copyright laws, users can enjoy the benefits of free access to knowledge while supporting the authors and publishers who make these resources available. In conclusion, the availability of 2014 Revit Manual free PDF books and manuals for download has revolutionized the way we access and consume knowledge. With just a few clicks, individuals can explore a vast collection of resources across different disciplines, all free of charge. This accessibility empowers individuals to become lifelong learners, contributing to personal growth, professional development, and the advancement of society as a whole. So why not unlock a world of knowledge today? Start exploring the vast sea of free PDF books and manuals waiting to be discovered right at your fingertips.

FAQs About 2014 Revit Manual Books

How do I know which eBook platform is the best for me? Finding the best eBook platform depends on your reading preferences and device compatibility. Research different platforms, read user reviews, and explore their features before making a choice. Are free eBooks of good quality? Yes, many reputable platforms offer high-quality free eBooks, including classics and public domain works. However, make sure to verify the source to ensure the eBook credibility. Can I read eBooks without an eReader? Absolutely! Most eBook platforms offer web-based readers or mobile apps that allow you to read eBooks on your computer, tablet, or smartphone. How do I avoid digital eye strain while reading eBooks? To prevent digital eye strain, take regular breaks, adjust the font size and background color, and ensure proper lighting while reading eBooks. What the advantage of interactive eBooks? Interactive eBooks incorporate multimedia elements, quizzes, and activities, enhancing the reader engagement and providing a more immersive learning experience. 2014 Revit Manual is one of the best book in our library for free trial. We provide copy of 2014 Revit Manual in digital format, so the resources that you find are reliable. There are also many Ebooks of related with 2014 Revit Manual. Where to download 2014 Revit Manual online for free? Are you looking for 2014 Revit Manual PDF? This is definitely going to save you time and cash in something you should think about.

Find 2014 Revit Manual :

nutrition and physical activity in inflammatory diseases
object oriented analysis and design understanding system development with uml 20

nvq nails training manual
nursing assistant nursing process approach student workbook 10th edition
occupational health and safety in construction project management
oasis test questions and answers
nutrisearch comparative guide
~~nutrient requirements of horses sixth revised edition animal nutrition series~~
nursing ace exam study guide
obra completa lengua y literatura debate 1 eso
nwea test for kindergarten printables
ob gyn billing cheat sheet
~~observatory science workbook answers~~
~~o reizinho da casa 268613~~
nys registered medical assistant exam study guide

2014 Revit Manual :

et si vous a c tiez allergique 2022 stage gapinc - Jul 20 2023
web et si vous a c tiez allergique the papers of benjamin franklin joseph d arimathie the english and the french languages compared in their grammatical constructions le diamant du chrétien nouveau testament traduction de sacy précédé des prières du matin et du soir de l ordinaire de la messe des vèpres et complies
etsivousactiezallergique cyberlab sutd edu sg - Jan 14 2023
web vous a c tiez allergique maybe you have knowledge that people have search numerous times for their chosen readings like si vous y êtes allergique translation into english jun 15 2023 les effets secondaires du thc et du cbd
comprendre les allergies ameli fr assuré - May 18 2023
web 04 octobre 2023 l allergie est une hypersensibilité de l organisme à des substances généralement inoffensives et présentes dans l environnement ces substances appelées allergènes peuvent se trouver dans l air l alimentation ou les médicaments notamment
et si vous a c tiez allergique ai classmonitor - Dec 13 2022
web et si vous a c tiez allergique downloaded from ai classmonitor com by guest greyson chaim carnegie institution of washington publication pims in the four months following the january 20 1783 armistice that ended the war for american independence franklin was remarkably energetic as he helped oversee the transition to

rhinite allergique différencier la grippe le rhume et les allergies - Feb 15 2023
web nov 20 2023 cependant si vous avez également les yeux rouges larmoyants ou enflés et des démangeaisons à la gorge il s agit probablement d une rhinite allergique car ces symptômes sont beaucoup moins
présentation des réactions allergiques troubles immunitaires - Sep 22 2023
web le latex peut provoquer la production d anticorps ige par le système immunitaire ce qui peut entraîner des réactions allergiques notamment de l urticaire des éruptions cutanées et même des réactions allergiques graves et potentiellement mortelles appelées réactions anaphylactiques
et si vous a c tiez allergique pdf protese odontocompany - Jun 07 2022
web le diamant du chrétien nouveau testament traduction de sacy précédé des prières du matin et du soir de l ordinaire de la messe des vèpres et complies the vulgate version of the arthurian romances le livre de lancelot del lac 1910 12 et si vous a c tiez allergique downloaded from protese odontocompany com by guest bethany powers
et si vous a c tiez allergique copy cyberlab sutd edu sg - Oct 11 2022
web et a vécu quatorze ans au canada avant de partir s installer à los angeles en 2006 marie alix a écrit pour le magazine elle québec et est apparue dans plusieurs émissions télévisées au canada elle a aussi été consultante pour l industrie du cinéma à los angeles que vous croyez ou non en la réincarnation
et si vous a c tiez allergique pdf ead3 archivists - Sep 10 2022
web oct 11 2023 et si vous a c tiez allergique medicinal chemistry thomas nogrady 2005 08 11 fully updated and rewritten by a basic scientist who is also a practicing physician the third edition of this popular textbook remains comprehensive authoritative and readable taking a receptor based target centered approach it presents the concepts
what you need to know about allergies in singapore - Mar 16 2023
web sep 4 2023 shellfish it is regarded as the most common food related allergy and the leading cause of anaphylaxis in singapore the main reasons are the large consumption of shellfish due to eating habits their abundant use in asian cooking and poor food labeling practices in singapore galactooligosaccharides gos gos is a prebiotic found in
et si vous a c tiez allergique pdf stage gapinc - Jul 08 2022
web 4 et si vous a c tiez allergique 2022 12 15 the victorian period and one of the greatest classical historians of all time this work includes his other works include lectures on modern history and historical essays and studies which were brought to light after his death camden third series the plays of molière in french with an english
et si vous a c tiez allergique cyberlab sutd edu sg - Jun 19 2023
web et si vous a c tiez allergique allergic encephalomyelitis apr 28 2020 allergy and allergic diseases may 02 2023 reserve your copy now this two volume book is an outstanding reference source on allaspects of allergy and allergic diseases

covering virtually everyallergic condition from the

et si vous étiez allergique by noël sambian - Apr 05 2022

web etes vous allergique fondation du souffle allergie tout sur les allergies doctissimo fr et si vous tiez allergique sambian nol suis je allergique allergologie o en est la mdecine allergie and co parce qu tre allergique n empche pas et si ctait une allergie dominique chteau waquet et si vous tiez allergique nol sambian 9782883533042

et si vous a c tiez allergique copy stage gapinc - May 06 2022

web et si vous a c tiez allergique downloaded from stage gapinc com by guest issac camacho the vulgate version of the arthurian romances cambridge university press the beginning of global commerce in the early modern period had an enormous impact on european culture changing the very way people perceived the world around them

et si vous a c tiez allergique 2023 stage gapinc - Mar 04 2022

web et si vous a c tiez allergique downloaded from stage gapinc com by guest cantrell conrad merchants and marvels digicat in the four months following the january 20 1783 armistice that ended the war for american independence franklin was remarkably energetic as he helped oversee the transition to peace and waged a multifaceted

allergy types top 12 most common allergies in singapore - Oct 23 2023

web 1 shellfish allergy shellfish allergies are the most common food allergy in singapore there are two different types of shellfish that people may be allergic to crustaceans prawns crabs lobsters and mollusks clams mussels oysters scallops squid and octopus the former is more common than the latter though a person may be allergic

allergy service kk women s and children s hospital - Apr 17 2023

web 9 00am 5 30pm allergies are common among children allergies to foods such as eggs milk nuts and shrimp and environmental factors such as dust mites often manifest as disorders of the skin or respiratory system and in severe cases the other systems as a specialist hospital for children our allergy team provides a comprehensive service

et si vous a c tiez allergique donate pfi org - Aug 09 2022

web et si vous a c tiez allergique et si vous a c tiez allergique 2 downloaded from donate pfi org on 2022 06 19 by guest readers a profound understanding of intensive care with a specific focus on organ systems their interactions and the effect of life support technologies pursuing a comprehensive approach to

et si vous a c tiez allergique book cyberlab sutd edu sg - Nov 12 2022

web et si vous a c tiez allergique allergic diseases from infancy to adulthood nov 20 2020 tietz s applied laboratory medicine may 19 2023 using a problem based approach tietz s applied laboratory medicine second edition presents interesting cases to illustrate the current use and

traduction de si vous êtes allergique en anglais reverso context - Aug 21 2023

web traductions en contexte de si vous êtes allergique en français anglais avec reverso context veuillez aviser le préposé si vous êtes allergique à certains aliments

lecture tobi est malade sami et julie caracolus - Feb 10 2023

web lecture tobi est malade sami et julie tobi est l ami de sami tobi est affamé sami donne du roti à tobi compte les pattes de tobi et colorie 2 pattes 4 pattes colle les images au bon endroit rôti robe rose roi ecris le mot en attaché avec les lettres mobiles affamé ecris une phrase avec les étiquettes

j apprends à lire avec sami et julie tobi est malade début de cp - Nov 07 2022

web jan 13 2016 retrouver tous les articles sur j apprends à lire avec sami et julie tobi est malade début de cp niveau 1 par léo lamarche commenter ce livre

j apprends à lire avec sami et julie tobi est malade début de cp - Jul 03 2022

web j apprends à lire avec sami et julie tobi est malade début de cp niveau 1sami et son chien tobi

sami et julie cp niveau 1 tobi est malade hachette education - Jul 15 2023

web sami et son chien tobi c est une grande histoire d amitié ils s amusent bien dans la neige au retour tobi tombe malade toute la famille prend soin de lui ce niveau 1 est conçu spécialement pour les enfants au début du cp les mots utilisés dans l histoire sont exclusivement construits avec des syllabes simples ba be bi bo bu to ma la de

sami et julie cp niveau 1 tobi est malade début de cp niveau 1 - Sep 05 2022

web sami et julie cp niveau 1 tobi est malade début de cp niveau 1 lesbre laurence bonté thérèse amazon es libros libros infantil literatura y ficción nuevo 2 95 los precios incluyen iva el precio final a pagar al finalizar la compra puede variar según la dirección de entrega ver detalles devoluciones gratis

sami et julie tobi est malade caracolus - May 13 2023

web nov 16 2020 tobi est malade cette aventure peut être mise en écho à sami est malade afin d en reprendre le lexique découvert niveau 1 début de cp aussi sanléane en propose une petite exploitation sur son blog

télécharger sami et julie cp niveau 1 tobi est malade de - Jan 29 2022

web oct 11 2019 sami et julie cp niveau 1 tobi est mal not 4 9 5 retrouvez sami et julie cp niveau 1 tobi est mal ets millions livres en stock sur amazon achetez neuf ou doccasion lecture cp pri 3 tobi est mal la classe lecture cp pri 3 tobi est mal merci cline pour cette petite lecture en 3 parties dun titre dune petite collection que jaime beaucoup

sami et julie cp niveau 1 tobi est malade amazon fr - Jun 14 2023

web sami et son chien tobi c est une grande histoire d amitié ils s amusent bien dans la neige au retour tobi tombe malade toute la famille prend soin de lui ce niveau 1 est conçu spécialement pour les enfants au début du cp

j apprends à lire avec sami et julie tobi est malade niveau 1 - Jun 02 2022

web apr 5 2016 j apprends à lire avec sami et julie tobi est malade niveau 1 french edition pocket book april 5 2016 french edition by laurence lesbre author

sami et julie cp niveau 1 sami est malade bonté - Jan 09 2023

web sami et julie cp niveau 1 sami est malade bonté thérèse amazon com tr Çerez tercihlerinizi seçin alışveriş deneyiminizi geliştirmek hizmetlerimizi sunmak müşterilerin hizmetlerimizi nasıl kullandığını anlayarak iyileştirmeler yapabilmek ve tanıtımları gösterebilmek için çerezler ve benzeri araçları kullanmaktayız

sami et julie cp niveau 1 sami est malade pocket book - Mar 31 2022

web sami et julie cp niveau 1 sami est malade lamarche léo bonté thérèse 9782017015369 books amazon ca

sami et julie cp niveau 1 tobi est malade pocket book - Mar 11 2023

web sami et son chien tobi c est une grande histoire d amitié ils s amusent bien dans la neige au retour tobi tombe malade toute la famille prend soin de lui ce niveau 1 est conçu spécialement pour les enfants au début du cp

sami et julie cp niveau 1 tobi est malade amazon com br - May 01 2022

web compre online sami et julie cp niveau 1 tobi est malade de lesbre laurence bonté thérèse na amazon frete grÁtis em milhares de produtos com o amazon prime encontre diversos livros escritos por lesbre laurence bonté thérèse com ótimos preços

sami et julie début de cp series by thérèse bonté goodreads - Oct 06 2022

web sami et julie tobi est malade by laurence lesbre 3 67 9 ratings 1 edition sami et son chien tobi c est une grande histoire want to read rate it sami et julie cp niveau 1 la malle de papi by isabelle albertin 4 12 8 ratings 1 edition sami et julie découvrent une vieille malle dans le want to read rate it la dispute

sami et julie cp niveau 1 tobi est malade enseignants - Aug 16 2023

web jan 13 2016 sami et son chien tobi c est une grande histoire d amitié ils s amusent bien dans la neige au retour tobi tombe malade toute la famille prend soin de lui ce niveau 1 est conçu spécialement pour les enfants au début du cp

sami et julie cp niveau 1 tobi est malade by laurence lesbre - Dec 28 2021

web jun 12 2023 this sami et julie cp niveau 1 tobi est malade by laurence lesbre thérèse bonté as one of the bulk operational sellers here will completely be accompanied by the best possibilities to review it will without a doubt waste the time

sami et julie sami et julie cp niveau 1 sami est malade - Aug 04 2022

web oct 3 2018 fnac sami et julie sami et julie cp niveau 1 sami est malade thérèse bonté léo lamarche hachette education

sami et julie cp niveau 1 tobi est malade vertbaudet - Apr 12 2023

web sami et julie cp niveau 1 tobi est malade hachette education sami et son chien tobi c est une grande histoire d amitié ils s

amusent bien dans la neige au retour tobi tombe malade toute la famille prend soin de lui ce niveau 1 est conçu spécialement pour les enfants au début du cp

sami et julie cp niveau 1 tobi est malade librairie eyrolles - Dec 08 2022

web sami et son chien tobi c est une grande histoire d amitié ils s amusent bien dans la neige au retour tobi tombe malade toute la famille prend soin de lui ce niveau 1 est conçu spécialement pour les enfants au début du cp les

sami et julie cp niveau 1 sami est malade lamarche léo - Feb 27 2022

web oct 3 2018 sami et julie cp niveau 1 sami est malade lamarche léo bonté thérèse on amazon com free shipping on qualifying offers sami et julie cp niveau 1 sami est malade

fillable online newsmagz south african army application forms 2015 - May 10 2023

web 01 start by obtaining the south african army application form you can either download it from the official website or collect a physical copy from the designated recruitment offices 02 read the instructions carefully before filling out the application form make sure you understand all the requirements and eligibility criteria 03

application forms south africa army for 2015 copy - Apr 28 2022

web application forms south africa army for 2015 u s army 2015 aug 03 2021 army techniques publication banking operations atp 1 06 3 january 2015 dec 27 2020 army techniques publication banking operations atp 1 06 3 january 2015 provides financial management soldiers and civilians with techniques for executing banking operations and

how to submit your application for the sa army careers portal - Jan 06 2023

web mar 4 2023 how to apply click here to download the sa army application form fill in the application form hand deliver the application to the nearest recruitment centre or mail your application to the sa army recruitment office applicants may also apply in person at the recruitment office

sa army military skills development programme 2015 2016 - Nov 04 2022

web how to apply download the south african military skills development application form 2015 16 if you are interested in the military skills development system in the sa army please complete the coupon with the requested documentation enclosed and post it to sa army hq dir army hr sa army recruiting centre private bag x 981 pretoria 0001

department of defence forms minister of defence and military - Oct 15 2023

web may 7 2021 sa air force msds application 2023 16 jan 2023 sa air force msds general application 2023 16 jan 2023 sa army msds application 2023 2 16 jan 2023 sa navy msds application 2023 1 16 jan 2023 samhs msds application 2023 2

application forms for the sa army 2015 pdf pdf - Sep 02 2022

web application forms for the sa army 2015 pdf pages 2 12 application forms for the sa army 2015 pdf upload caliva f paterson 2 12 downloaded from status restek wwu edu on september 19 2023 by caliva f paterson copyright material note

that government documents are in the public domain we print these paperbacks as a service so you

fillable online south african army application forms 2015 - Jul 12 2023

web get the free south african army application forms 2015 2016 south african army application forms get form show details

get the free south african army forms for 2015 pdffiller - Mar 08 2023

web 01 start by carefully reading the instructions provided on the form make sure you understand all the requirements and sections that need to be completed 02 gather all the necessary supporting documents and information that may be required for the form this can include identification documents educational certificates and medical records 03

south african army application form 2024 2025 selection - Jun 30 2022

web you can join the south african army by completing an application form and sending it in read also saps application form 2024 2025 requirements pdf read the full application form ensure you meet the personal requirements you must be between 18 and 22 years old but if you are a college graduate you can be up to 26 years of age

get the free south african army forms march 2015 pdffiller - Feb 07 2023

web 01 individuals applying to join the south african army if you are interested in joining the south african army you will need to fill out the necessary forms as part of the application process these forms will gather information about your personal details educational background employment history and other relevant information 02

application form of sa army for 2015 download only cie - Dec 05 2022

web application form of sa army for 2015 application form of sa army for 2015 3 downloaded from cie advances asme org on 2019 11 02 by guest engagement the authors incorporate a variety of case studies including kosovo timor leste syria libya and iraq and examine the complexity of interventions across their different

application forms for the sa army 2015 book pivotid uvu - Aug 01 2022

web application forms for the sa army 2015 application forms for the sa army 2015 4 downloaded from pivotid uvu edu on 2021 02 19 by guest single volume work in the field is comparable in terms of its accessibility currency and scope the routledge handbook of mapping and cartography draws on the wealth of new

application form for south african army 2015 download only - Mar 28 2022

web 4 application form for south african army 2015 2020 09 23 publication introduced last year ensures that all the data is current the grants register provides an ideal reference source for those who need accurate information on postgraduate funding careers advisors university libraries student

application forms for the sa army 2015 db csda - Jun 11 2023

web catalog of war production board reporting and application forms as of november 2 1945 application forms for the sa army 2015 downloaded from db csda org by guest sasha marlee labour and employment compliance in south africa kluwer

law international b v new scientist magazine was launched in 1956 for all those men and

sa army 2023 2024 intake application update applicationsa - Feb 24 2022

web submit the following documents with your application form a valid id card or proof of identification a copy of your grade 12 certificate your up to date curriculum vitae a certificate of your highest academic qualification obtained so far once you have completed the form you can submit your application with the required documentation to

sa army applications are open for 2023 2024 applications - Oct 03 2022

web feb 1 2023 you can download application form at the bottom of this article applications closing date on 28 february 2023 18 22 years when reporting for msds 2024 intake and successfully completed grade 12 with the admission point score aps as stipulated i

applications for south african military service 2015 - Apr 09 2023

web applications for south african military service 2015 an analysis of educational challenges in the new south africa jan 12 2021 this book deals with current developments in black education in south africa since the introduction of bantu education in the beginning of the 1990s during the period under discussion improvements have

fillable online 64 140 159 sa army application form 2015 - Sep 14 2023

web individuals who aspire to join the south african army need to complete the sa army application form whether it is for regular force recruitment reserve force deployment or specialized units the application form is a key requirement for anyone interested in

fillable online south african army application forms 2015 - Aug 13 2023

web fillable online south african army application forms 2015 2016 pdf south african army application forms 2015 2016 pdf fax email print pdffiller we are not affiliated with any brand or entity on this form get the free south african army application forms 2015 2016 pdf

sa army recruitment 2024 application form download pdf - May 30 2022

web learn how to apply for the latest south african sa army recruitment and download the application form pdf online and fill in your details the south african national defence force sandf is calling on interested candidates who wish to join the defence force to send in their applications table of contents south african army recruitment