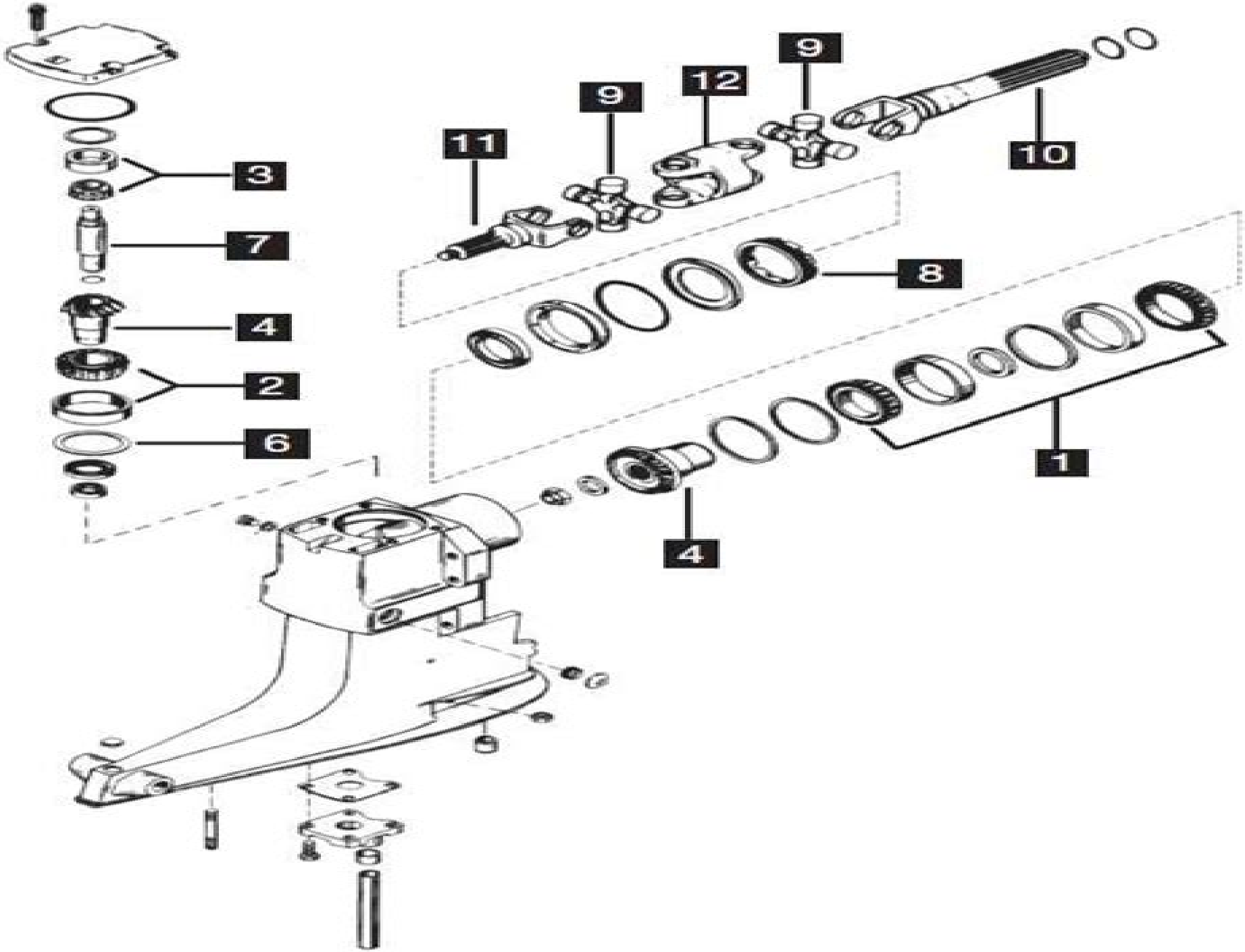
9
12
9
11
10
3
7
8
4
2
6
1
4

Mercruiser Alpha One Generation 1 Manual

Y Pai

Mercruiser Alpha One Generation 1 Manual:

Boating ,2008-02 **Subject Guide to Books in Print** ,2001 Boating ,1996-01 **Subject Guide to Children's Books in Print 1997** Bowker Editorial Staff,R R Bowker Publishing,1996-09 **MotorBoating** ,1997-01 **Boating** ,1995-01 **MotorBoating** ,1996-02 *Boating* ,1995-01 **Yachting** ,1973 *Boating* ,1995-07 Boating ,1995-01 **Lakeland Boating** ,1999 Mercruiser Stern Drive Shop Manual ,1989 **Mercruiser Stern Drive Shop Manual** Alan Ahlstrand,Randy Stephens,1989 **MerCruiser Stern Drive Shop Manual** Penton Staff,2000-05-24 3 0 L 4 3 L 5 0 L 5 7 L 7 4 L 8 2 L 350 Magnum 454 Magnum 502 Magnum Mercruiser Stern Drive Shop Manual 1998-2004 Penton Staff,2000-05-24 MerCruiser Alpha One 1998 2004 MerCruiser Bravo One 1998 2004 MerCruiser Bravo Two 1998 2004 MerCruiser Bravo Three 1998 2004 Engines 1998 2004 3 0 L 1998 2004 4 3 L 1998 2004 5 0 L 1998 2004 5 7 L 1998 2004 350 Mag 1998 2004 **MerCruiser Stern Drive Shop Manual 1998-2013** Editors of Clymer Manuals,2015-08-15 Stern Drives MerCruiser Alpha One 1998 2013 MerCruiser Bravo One 1998 2013 MerCruiser Bravo Two 1998 2013 MerCruiser Bravo Three 1998 2013 Engines 1998 2013 3 0 L 1998 2013 4 3 L 1998 2013 5 0 L 1998 2013 5 7 L 1998 2013 350 Mag 1998 2013 MX 6 2 L 1998 2013 454 Mag 1998 2013 502 Mag 1998 2013 496 Mag 1998 2013 496 Mag HO 1998 2013 7 4 L MPI 1998 2013 TROUBLESHOOTING LUBRICATION MAINTENANCE AND TUNE UP ENGINE TOP END ENGINE LOWER END CLUTCH AND EXTERNAL SHIFT MECHANISM TRANSMISSION AND INTERNAL SHIFT MECHANISM FUEL EMISSION CONTROL AND EXHAUST SYSTEMS ELECTRICAL SYSTEM COOLING SYSTEM WHEELS TIRES AND DRIVE CHAIN FRONT SUSPENSION AND STEERING REAR SUSPENSION BRAKES BODY AND FRAME COLOR WIRING DIAGRAMS **Clymer MerCruiser Stern Drive Shop Manual** ,1992 **Clymer MerCruiser Stern Drive Shop Manual** ,1993-01-01 **MerCruiser Stern Drive Shop Manual 1995-1997 AlphaOne, Bravo One, Bravo Two & Bravo Three** ,1997

Immerse yourself in the artistry of words with is expressive creation, Discover the Artistry of **Mercruiser Alpha One Generation 1 Manual** . This ebook, presented in a PDF format (PDF Size: *), is a masterpiece that goes beyond conventional storytelling. Indulge your senses in prose, poetry, and knowledge. Download now to let the beauty of literature and artistry envelop your mind in a unique and expressive way.

https://dev.flighttrampolinepark.com/data/Resources/default.aspx/garden_construction.pdf

Table of Contents Mercruiser Alpha One Generation 1 Manual

1. Understanding the eBook Mercruiser Alpha One Generation 1 Manual
    - The Rise of Digital Reading Mercruiser Alpha One Generation 1 Manual
    - Advantages of eBooks Over Traditional Books
2. Identifying Mercruiser Alpha One Generation 1 Manual
    - Exploring Different Genres
    - Considering Fiction vs. Non-Fiction
    - Determining Your Reading Goals
3. Choosing the Right eBook Platform
    - Popular eBook Platforms
    - Features to Look for in an Mercruiser Alpha One Generation 1 Manual
    - User-Friendly Interface
4. Exploring eBook Recommendations from Mercruiser Alpha One Generation 1 Manual
    - Personalized Recommendations
    - Mercruiser Alpha One Generation 1 Manual User Reviews and Ratings
    - Mercruiser Alpha One Generation 1 Manual and Bestseller Lists
5. Accessing Mercruiser Alpha One Generation 1 Manual Free and Paid eBooks
    - Mercruiser Alpha One Generation 1 Manual Public Domain eBooks
    - Mercruiser Alpha One Generation 1 Manual eBook Subscription Services
    - Mercruiser Alpha One Generation 1 Manual Budget-Friendly Options

6. Navigating Mercruiser Alpha One Generation 1 Manual eBook Formats
    - ePub, PDF, MOBI, and More
    - Mercruiser Alpha One Generation 1 Manual Compatibility with Devices
    - Mercruiser Alpha One Generation 1 Manual Enhanced eBook Features
7. Enhancing Your Reading Experience
    - Adjustable Fonts and Text Sizes of Mercruiser Alpha One Generation 1 Manual
    - Highlighting and Note-Taking Mercruiser Alpha One Generation 1 Manual
    - Interactive Elements Mercruiser Alpha One Generation 1 Manual
8. Staying Engaged with Mercruiser Alpha One Generation 1 Manual
    - Joining Online Reading Communities
    - Participating in Virtual Book Clubs
    - Following Authors and Publishers Mercruiser Alpha One Generation 1 Manual
9. Balancing eBooks and Physical Books Mercruiser Alpha One Generation 1 Manual
    - Benefits of a Digital Library
    - Creating a Diverse Reading Collection Mercruiser Alpha One Generation 1 Manual
10. Overcoming Reading Challenges
    - Dealing with Digital Eye Strain
    - Minimizing Distractions
    - Managing Screen Time
11. Cultivating a Reading Routine Mercruiser Alpha One Generation 1 Manual
    - Setting Reading Goals Mercruiser Alpha One Generation 1 Manual
    - Carving Out Dedicated Reading Time
12. Sourcing Reliable Information of Mercruiser Alpha One Generation 1 Manual
    - Fact-Checking eBook Content of Mercruiser Alpha One Generation 1 Manual
    - Distinguishing Credible Sources
13. Promoting Lifelong Learning
    - Utilizing eBooks for Skill Development
    - Exploring Educational eBooks
14. Embracing eBook Trends
    - Integration of Multimedia Elements

- Interactive and Gamified eBooks

Mercruiser Alpha One Generation 1 Manual Introduction

In this digital age, the convenience of accessing information at our fingertips has become a necessity. Whether its research papers, eBooks, or user manuals, PDF files have become the preferred format for sharing and reading documents. However, the cost associated with purchasing PDF files can sometimes be a barrier for many individuals and organizations. Thankfully, there are numerous websites and platforms that allow users to download free PDF files legally. In this article, we will explore some of the best platforms to download free PDFs. One of the most popular platforms to download free PDF files is Project Gutenberg. This online library offers over 60,000 free eBooks that are in the public domain. From classic literature to historical documents, Project Gutenberg provides a wide range of PDF files that can be downloaded and enjoyed on various devices. The website is user-friendly and allows users to search for specific titles or browse through different categories. Another reliable platform for downloading Mercruiser Alpha One Generation 1 Manual free PDF files is Open Library. With its vast collection of over 1 million eBooks, Open Library has something for every reader. The website offers a seamless experience by providing options to borrow or download PDF files. Users simply need to create a free account to access this treasure trove of knowledge. Open Library also allows users to contribute by uploading and sharing their own PDF files, making it a collaborative platform for book enthusiasts. For those interested in academic resources, there are websites dedicated to providing free PDFs of research papers and scientific articles. One such website is Academia.edu, which allows researchers and scholars to share their work with a global audience. Users can download PDF files of research papers, theses, and dissertations covering a wide range of subjects. Academia.edu also provides a platform for discussions and networking within the academic community. When it comes to downloading Mercruiser Alpha One Generation 1 Manual free PDF files of magazines, brochures, and catalogs, Issuu is a popular choice. This digital publishing platform hosts a vast collection of publications from around the world. Users can search for specific titles or explore various categories and genres. Issuu offers a seamless reading experience with its user-friendly interface and allows users to download PDF files for offline reading. Apart from dedicated platforms, search engines also play a crucial role in finding free PDF files. Google, for instance, has an advanced search feature that allows users to filter results by file type. By specifying the file type as "PDF," users can find websites that offer free PDF downloads on a specific topic. While downloading Mercruiser Alpha One Generation 1 Manual free PDF files is convenient, its important to note that copyright laws must be respected. Always ensure that the PDF files you download are legally available for free. Many authors and publishers voluntarily provide free PDF versions of their work, but its essential to be cautious and verify the authenticity of the source before downloading Mercruiser Alpha One Generation 1 Manual. In conclusion, the internet offers numerous platforms and websites that allow

users to download free PDF files legally. Whether its classic literature, research papers, or magazines, there is something for everyone. The platforms mentioned in this article, such as Project Gutenberg, Open Library, Academia.edu, and Issuu, provide access to a vast collection of PDF files. However, users should always be cautious and verify the legality of the source before downloading Mercruiser Alpha One Generation 1 Manual any PDF files. With these platforms, the world of PDF downloads is just a click away.

FAQs About Mercruiser Alpha One Generation 1 Manual Books

1. Where can I buy Mercruiser Alpha One Generation 1 Manual books? Bookstores: Physical bookstores like Barnes & Noble, Waterstones, and independent local stores. Online Retailers: Amazon, Book Depository, and various online bookstores offer a wide range of books in physical and digital formats.
2. What are the different book formats available? Hardcover: Sturdy and durable, usually more expensive. Paperback: Cheaper, lighter, and more portable than hardcovers. E-books: Digital books available for e-readers like Kindle or software like Apple Books, Kindle, and Google Play Books.
3. How do I choose a Mercruiser Alpha One Generation 1 Manual book to read? Genres: Consider the genre you enjoy (fiction, non-fiction, mystery, sci-fi, etc.). Recommendations: Ask friends, join book clubs, or explore online reviews and recommendations. Author: If you like a particular author, you might enjoy more of their work.
4. How do I take care of Mercruiser Alpha One Generation 1 Manual books? Storage: Keep them away from direct sunlight and in a dry environment. Handling: Avoid folding pages, use bookmarks, and handle them with clean hands. Cleaning: Gently dust the covers and pages occasionally.
5. Can I borrow books without buying them? Public Libraries: Local libraries offer a wide range of books for borrowing. Book Swaps: Community book exchanges or online platforms where people exchange books.
6. How can I track my reading progress or manage my book collection? Book Tracking Apps: Goodreads, LibraryThing, and Book Catalogue are popular apps for tracking your reading progress and managing book collections. Spreadsheets: You can create your own spreadsheet to track books read, ratings, and other details.
7. What are Mercruiser Alpha One Generation 1 Manual audiobooks, and where can I find them? Audiobooks: Audio recordings of books, perfect for listening while commuting or multitasking. Platforms: Audible, LibriVox, and Google Play Books offer a wide selection of audiobooks.
8. How do I support authors or the book industry? Buy Books: Purchase books from authors or independent bookstores.

Reviews: Leave reviews on platforms like Goodreads or Amazon. Promotion: Share your favorite books on social media or recommend them to friends.

9. Are there book clubs or reading communities I can join? Local Clubs: Check for local book clubs in libraries or community centers. Online Communities: Platforms like Goodreads have virtual book clubs and discussion groups.
10. Can I read Mercruiser Alpha One Generation 1 Manual books for free? Public Domain Books: Many classic books are available for free as theyre in the public domain. Free E-books: Some websites offer free e-books legally, like Project Gutenberg or Open Library.

Find Mercruiser Alpha One Generation 1 Manual :

garden construction
manual for bissell little green
bmw alternator wiring diagram
personalized moon transit report
american odyssey test answers
a fairy tale ending
1994 audi 100 washer pump lead manual
manual da impressora brother dcp j125
safeway 2 hour turkey recipe
2007 chevrolet monte carlo owners manual
700 mud pro service manual
2013 maths grade paper november
larchitecture des pyramides a textes ii saqqara sud mibion archeologique de saqqara iii
standaard boeken top 10
2001 volkswagen passat electrical problems

Mercruiser Alpha One Generation 1 Manual :

mon livre des gros engins by minna lacey goodreads - Mar 01 2023
web ouvre les grandes pages dépliables pour découvrir quelques uns des plus gros et des plus puissants engins jamais construits excavatrices géantes camions monstres super

mon livre des gros engins minna lacey babelio - May 03 2023
web jul 12 2018 un impressionnant assortiment d engins et de machines de toutes sortes illustrés à l aide de volets et de dépliants pour les plus gros camions monstres
mon livre des gros engins livre d occasion - Mar 21 2022
web apr 5 2023 mon grand livre dépliants mon livre des gros camions par megan cullis mike byrne aux éditions usborne avec de grandes illustrations des pages
mon livre des gros engins 2022 secure mowtampa - Dec 18 2021

amazon fr mon livre des gros engins - Jul 05 2023
web mon livre des gros engins minna lacey gabriele antonini stephen wright usborne des milliers de livres avec la livraison chez vous en 1 jour ou en magasin avec 5 de
mon livre des gros engins pascal varejka librairie eyrolles - Jun 23 2022
web ouvre les grandes pages dépliables pour découvrir quelques uns des plus gros et des plus puissants engins jamais construits excavatrices
mon livre des gros engins hardcover july 12 2018 amazon com - Apr 02 2023
web jul 12 2018 un impressionnant assortiment d engins et de machines de toutes sortes illustrés à l aide de volets et de dépliants pour les plus gros camions monstres
mon livre des gros engins lacey minna 9781409527770 - Jan 31 2023
web découvrez des commentaires utiles de client et des classements de commentaires pour mon livre des gros engins sur amazon fr lisez des commentaires honnêtes et non
mon livre des gros engins mon grand livre dépliants hardcover - Sep 26 2022
web mon livre des gros engins mon grand livre dépliants french edition lacey minna amazon com au books
mon livre des gros engins relié illustré 12 juillet 2018 - Oct 08 2023
web gabriele antonini mon livre des gros engins relié 10 février 2011 de minna lacey auteur gabriele antonini illustrations stephen wright cover art 4 6 48 évaluations
mon livre des gros engins et d autres plus petits decitre - Oct 28 2022
web buy mon livre des gros engins mon grand livre dépliants by online on amazon ae at best prices fast and free shipping free returns cash on delivery available on eligible
mon livre des gros engins ai classmonitor - Jan 19 2022
web mon livre des gros engins oeuvres completes de voltaire edition dediee aux amateurs de l art typographique la truité de

rivière pêche à la mouche artificielle mémoires de

mon livre des gros engins broché minna lacey gabriele - Jun 04 2023

web aug 1 2018 un régal pour les fans de gros engins en tout genre 8 thèmes sur des doubles pages les engins de mines les machines agricoles les machines

amazon fr mon livre des gros engins lacey minna antonini - Sep 07 2023

web un impressionnant assortiment d engins et de machines de toutes sortes illustrés à l aide de volets et de dépliants pour les plus gros camions monstres excavatrices avions

mon livre des gros engins mon grand livre dépliants french - Aug 26 2022

web heures d ouverture activités en magasin coordonnées du services aux institutions english panier 99 rechercher select recherche avancée accueil livres

mon livre des gros engins et d autres plus petits - May 23 2022

web retrouvez mon livre des gros camions et des millions de livres en stock sur amazon fr achetez neuf ou d occasion passer au contenu principal fr bonjour pour les accros

mon livre des gros camions amazon fr - Apr 21 2022

web résuméusborne 16 pages À propos de l auteur lacey minna n c fiche technique titre mon livre des gros engins auteur lacey minna langue anglais format relié

mon livre des gros engins cartonné minna lacey gabriele - Aug 06 2023

web 1 48 sur 80 résultats pour mon livre des gros engins résultats en apprendre plus sur ces résultats mon livre des gros engins de minna lacey gabriele antonini et al 48

mon grand livre dépliants mon livre des gros camions - Feb 17 2022

web ford exerça entre autres sur l évolution du monde agricole le livre de la chasse mon livre des gros enginsun chantieravec ce livre tu vas devenir un expert de la

collectif mon livre des gros engins albums illustrés - Jul 25 2022

web feb 10 2011 11 50 indisponible résumé ouvre les grandes pages dépliables pour découvrir quelques uns des plus gros et des plus puissants engins jamais construits

mon livre des gros engins et d autres plus petits rakuten - Nov 28 2022

web feb 10 2011 bee ne veut pas d animaux ils meurent et encore moins une relation amoureuse les gens partent des raisons de se faire briser le coeur notre héros est

amazon fr commentaires en ligne mon livre des gros engins - Dec 30 2022

web jul 8 2021 mon livre des gros engins et d autres plus petits pas cher retrouvez tous les produits disponibles à l achat

sur notre site

le génie des alpages tome 2 comme des bêtes by f murrr - Jan 07 2023

web le génie des alpages tome 2 comme des bêtes by f murrr le gnie des alpages tome 13 cheptel maudit f murrr alpinestarsneckbrace my nvr endin story le g nie des

le génie des alpages tome 2 comme des bêtes hardcover - May 11 2023

web buy le génie des alpages tome 2 comme des bêtes by f murrr f murrr f murrr isbn 9782205008920 from amazon s book store everyday low prices and free

le ga c nie des alpages tome 2 comme des bates pdf - Mar 29 2022

web le génie des alpages tome 2 comme des bêtes par f murrr 150 150 évaluations extrait relié 48 pages paru le 7 juin 1996 chez dargaud collection genie des

le génie des alpages tome 2 comme des bêtes génie - Mar 09 2023

web entre terre et ciel très haut dans les alpages juste en dessous des nuages vivent des héros le génie des alpages tome 2 comme des bêtes génie des alpages le

le ga c nie des alpages tome 2 comme des bates - Nov 24 2021

web jun 2 2023 2 2023 by guest le ga c nie des alpages tome 2 comme des bates when somebody should go to the book stores search launch by shop shelf by shelf it is

le ga c nie des alpages tome 2 comme des bates copy - Oct 24 2021

web comme des betes f murrr le génie des alpages dargaud comédie 9782205008920 nouveautés albums comics manga jeunesse tirages affiches objets

le ga c nie des alpages tome 2 comme des bates pdf - Jan 27 2022

web le ga c nie des alpages tome 2 comme des bates 2 8 downloaded from uniport edu ng on june 13 2023 by guest particles which are widely used in conversation appendices

le génie des alpages tome 2 comme des bêtes f murrr - May 31 2022

web le génie des alpages tome 2 tome 2 le génie des alpages tome 2 comme des bêtes f murrr f murrr dargaud des milliers de livres avec la livraison chez vous en 1

le ga c nie des alpages tome 2 comme des bates full pdf - Jul 01 2022

web sep 6 2006 le génie des alpages tome 2 comme des bêtes de f murrr Éditeur dargaud livraison gratuite à 0 01 dès 35 d achat librairie decitre votre prochain

le génie des alpages tome 2 comme des bêtes - Oct 04 2022

web jun 7 1996 le génie des alpages tome 2 comme des bêtes f murrr f murrr f murrr on amazon com free shipping on

qualifying offers le génie des alpages

le génie des alpages tome 2 comme des bêtes hardcover - Aug 02 2022

web le ga c nie des alpages tome 2 comme des bates full pdf ol wise edu jo author dillon sage subject an explanatory and pronouncing dictionary of the english

le génie des alpages tome 2 comme des bêtes f murrr - Feb 25 2022

web may 5 2023 le ga c nie des alpages tome 2 comme des bates 1 9 downloaded from uniport edu ng on may 5 2023 by guest le ga c nie des alpages tome 2 comme

le ga c nie des alpages tome 2 comme des bates pdf pdf - Dec 06 2022

web athanase berger pensif et rêveur réunit autour de lui des brebis dotées d un quotient intellectuel élevé un bélier adulé nommé romuald un chien heureux de sa condition de

le ga c nie des alpages tome 2 comme des bates pdf - Nov 05 2022

web le ga c nie des alpages tome 2 comme des bates getting the books le ga c nie des alpages tome 2 comme des bates now is not type of challenging means you could

le génie des alpages tome 2 comme des bêtes f murrr - Sep 03 2022

web le génie des alpages tome 2 comme des bêtes f murrr amazon com au books

le ga c nie des alpages tome 2 comme des bates pdf - Dec 26 2021

web may 29 2023 getting the books le ga c nie des alpages tome 2 comme des bates now is not type of challenging means you could not without help going similar to ebook buildup

le génie des alpages tome 2 comme des bêtes génie des - Apr 10 2023

web le génie des alpages tome 2 comme des bêtes génie des alpages book read reviews from world s largest community for readers entre terre et ciel tr

le génie des alpages tome 2 f murrr comédie bdnet com - Sep 22 2021

le génie des alpages tome 2 tome 2 le génie des alpages - Apr 29 2022

web mar 27 2023 le ga c nie des alpages tome 2 comme des bates 1 4 downloaded from uniport edu ng on march 27 2023 by guest le ga c nie des alpages tome 2 comme

le génie des alpages tome 2 comme des bêtes amazon fr - Jun 12 2023

web retrouvez le génie des alpages tome 2 comme des bêtes et des millions de livres en stock sur amazon fr achetez neuf ou d occasion amazon fr le génie des alpages

critiques de le génie des alpages tome 2 comme des bêtes - Feb 08 2023

web apr 21 2012 10 critiques sur ce livre comme des bêtes est le second tome de la bd humoristique le génie des alpages au même titre qu à l album précédent l auteur

le génie des alpages 2 comme des bêtes bedetheque - Jul 13 2023

web mar 5 2002 série génie des alpages le titre comme des bêtes tome 2 identifiant 11145 scénario f murrr dessin f murrr

le génie des alpages tome 2 comme des bêtes babelio - Aug 14 2023

web jun 7 1996 comme des bêtes est le second tome de la bd humoristique le génie des alpages au même titre qu à l album précédent l auteur utilise un humour assez

pond wikipedia - Jun 13 2023

web a pond is a small still land based body of water formed by pooling inside a depression either naturally or artificially

menu pond restaurant - Jan 28 2022

web shrimp grits martini 11 5 stone ground dinner style grits with bell peppers and 3 three cheeses topped with extra cheese bacon and chives

punggol park parks nature reserves national parks board - Aug 15 2023

web punggol park developed with the theme family leisure punggol park has facilities and activities for the whole family with an active zone located at the southern part of the pond and passive zone at the north of the pond there is something for both young and old to enjoy children can play together on the play equipment and

the pond ice rink sports complex - Jun 20 2021

web welcome to the pond the pond is northeast ohio s premier family friendly ice arena and sports complex conveniently located just 5 miles east of chagrin falls where the counties of cuyahoga geauga summit and portage meet 9999 e washington street chagrin falls ohio 44023 telephone 440 543 3884 shop now live schedule welcome to

pond mysteriously turns bright pink in hawaii sky news - Aug 23 2021

web nov 11 2023 a pond in hawaii has mysteriously turned bright pink with experts voicing concerns about the bizarre phenomenon curious onlookers have been flocking to the pond after images first appeared on

water at kealia pond in hawaii has turned pink amid drought cnn - Apr 18 2021

web nov 10 2023 a pond in hawaii looks like something right out of a fairy tale water at the kealia pond national wildlife refuge one of the few coastal salt marshes on the island of maui has been bright pink

pond english meaning cambridge dictionary - Dec 07 2022

web a humorous way of referring to the atlantic ocean when it is thought of as separating the uk or europe and the us it s good to get a view from the other side of the pond fewer

pond definition in the cambridge english dictionary - Oct 05 2022

web pond meaning 1 an area of water smaller than a lake often artificially made 2 a humorous way of referring learn more

fishing fun recreation activities national parks board - Sep 16 2023

web the pond promises to provided both amateurs as well as the experienced a positive fishing experience and enjoy good quality time with their family through fishing outing at the pond please note that fishing is only permitted in designated areas at the aforementioned parks and we seek your cooperation in ensuring that fishing is carried out in a responsible

the pond a modern chinese gastro bar - Aug 03 2022

web the pond modern provincial cuisine cum bar restaurant at civic square of elements taking up two floors this conceptual restaurant brings together the elements of sea to table gastro bar and modern chinese an outdoor bar area serves cocktails and peking huaiyang style bar snacks offering some most fashionable tastes and

pink water in maui pond is eye catching but drought may be to - Feb 14 2021

web nov 10 2023 a hawaii refuge pond has turned eye catching pink and scientists think they know why when a pond within a hawaiian wildlife refuge unexpectedly turned bright pink late in october word soon

the pond recruitment creative marketing digital jobs - Feb 26 2022

web tech marketing media recruitment search talent client enquiry talent register full time roles creative directors jen creative director art director graphic design brand

wildlife refuge pond in hawaii mysteriously turns bright pink - Oct 25 2021

web nov 10 2023 the pond at the kealia pond national wildlife refuge on maui hawaii is seen on nov 8 2023 photo leslie diamond via ap when it rains the stream will flow into kealia s main pond and then

hawaii wildlife refuge pond mysteriously turns bubble gum pink - Jan 16 2021

web nov 10 2023 the pond has been through periods of drought and high salinity before though and wolfe isn t sure why the color has changed now curious visitors have flocked to the park after photos and video

the pond wikipedia - Sep 04 2022

web see also pond pond disambiguation big pond disambiguation the ponds disambiguation the pond moonlight 1904 photograph by edward steichen this disambiguation page lists articles associated with the title the pond if an internal link led you here you may wish to change the link to point directly to the intended article

pond definition meaning merriam webster - Jan 08 2023

web nov 5 2016 pond noun a body of water usually smaller than a lake

president halimah launches enhanced swan pond at istana - Mar 10 2023

web apr 5 2023 their wish was granted on wednesday when a group of 30 bmss students and alumni were invited to visit the istana grounds for the launch of the newly enhanced swan pond the largest pond there

the pond 2021 imdb - Nov 25 2021
web feb 23 2021 the pond 2021 imdb cast crew user reviews trivia faq imdbpro all topics the pond 2021 not rated 1h 36m imdb rating 3 9 10 803 your rating rate play trailer 2 19 1 video 10 photos drama horror mystery anthropology professor was kicked out from his university for claiming to be on the threshold of an apocalyptic discovery
watch hawaii s mysterious barbie pink pond bbc news - Mar 18 2021
web nov 11 2023 the kealia pond national wildlife refuge in maui hawaii has seen a recent influx of visitors but they re not there to see the wetlands they ve come for the bubblegum pink pond scientists do
the pond 2021 official trailer hd youtube - Jul 02 2022
web feb 23 2021 rapid trailer 42k views 1 month ago 13m views 1m views 48k views new a show of hands 15k views 390k views 2 years ago uc marin master gardeners 49k views 1 year ago rent a pal official trailer
tourists are flocking to strange bubblegum pink pond in hawaii - Jul 22 2021
web the keālia pond turned pink on october 30 2023 this picture was taken on november 8 leslie diamond ap while the pond has experienced drought and periods of high salinity in the past this is
pond ecology penn state extension - Dec 27 2021
web oct 31 2022 introduction pond ecology is best described as the interaction of the life in your pond with the environment that exists there a shallow nutrient rich pond exposed to sunlight with little water flowing through it will be teeming with algae and aquatic plants it may have very little animal life present because of low oxygen levels
the water that binds national archives of singapore - Feb 09 2023
web 1990s the pond is a forerunner of the abc waters programme having undergone transformation in its early years from a bare stormwater collection pond to an attractive wooded lake it was one of the projects identified then to undergo landscaping enhancements to complement adjacent residential developments and encourage
pond ecology and conservation research priorities and - Jun 01 2022
web dec 9 2021 in may 2019 leading pond researchers regulators and practitioners across the united kingdom including natural england the environment agency and the freshwater habitats trust came together at a workshop pond ecology and conservation in the anthropocene to discuss the current status and future directions of key pond
how ponds tell story of the air pollution around them - Sep 23 2021
web 23 hours ago individual ponds told the story of the air pollution around them but many trends were common across the whole region lead was found in the pond muds this increased rapidly from the 1970
s pore woman seen feeding fish in bishan amk park allegedly - Oct 17 2023
web 22 hours ago poured milk powder into pond photo from hu the woman s actions were seen by a passer by hu

transliteration a 36 year old clerk who reported it to shin min daily news

pond in hawaii turned pink raising a red flag for the - May 20 2021

web nov 11 2023 a pond in hawaii turned pink raising an environmental red flag dry conditions and high salt levels in the water allowed for halobacteria to thrive turning a pond bubble gum pink shad hanohano

the pond review 2021 worth watching all horror - Mar 30 2022

web the pond is a serbian folk horror film directed and co written by petar pasic in his full length feature directorial debut it stars marco canadea as an unnamed protagonist and leslie kunz as his lover can a grieving professor puzzle out the nature of reality between his unpredictable naps

ecosystem wellington ministry of education - Nov 06 2022

web an ecosystem is a community of living organisms together with the non living components of their environment such as air quality amount of light water and mineral soil interacting as a system the ecosystem at wellington primary can be primarily divided into the pond and garden ecosystem pond ecosystem wellington a pond a large earth depression

jurong island pond building flood resilience naturally jtc - Jul 14 2023

web hence jtc is test bedding a nature based solution on the island that works to enhance flood resilience against future projections of more intense and frequent storms due to climate change known as the jurong island pond this solution covers an area of about 8 9 hectares equivalent to 17 football fields and is designed to make use of

garden pond singapore science park - May 12 2023

web garden pond a landscape designed for calm and tranquility to offer respite from the workday spot a variety of wild animals like monitor lizards otters and many fascinating birds in the park address pavilion between the alpha teletech park 21 science park road singapore 117628 for enquiries email ssp capitaland com

the pond rotten tomatoes - Apr 30 2022

web an anthropology professor who thinks he s on the brink of an apocalyptic discovery becomes submerged in madness and loses his university post but his hallucinations reveal that someone or

jtc builds first of its kind pond on jurong island to enhance flood - Apr 11 2023

web dec 12 2022 jtc s chief sustainability officer mr tan chee kiat said the pond represents a first of its kind nature based solution that uses jurong island s unique sandy terrain to strengthen our climate change resilience with this pond we are able to channel and release rainwater naturally without any pipes pumps and mechanical drainage