OPERATOR'S MANUAL

MTD
For A Growing World.™

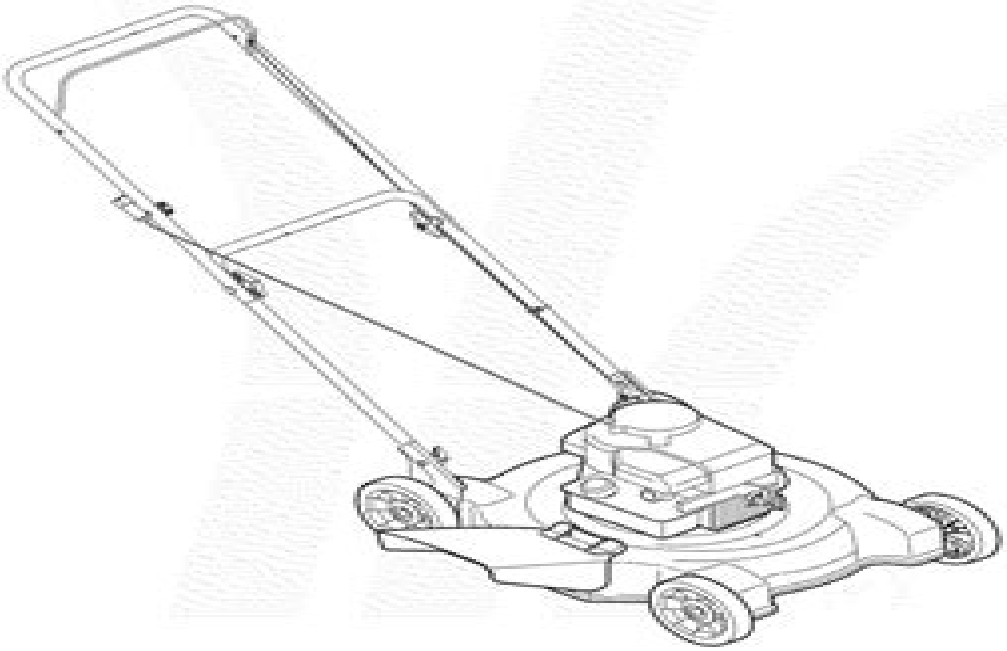

22" Rotary Mower — Model Series 070

IMPORTANT

READ SAFETY RULES AND INSTRUCTIONS CAREFULLY BEFORE OPERATION

Warning: This unit is equipped with an internal combustion engine and should not be used on or near any unimproved forest-covered, brush-covered or grass-covered land unless the engine's exhaust system is equipped with a spark arrester meeting applicable local or state laws (if any). If a spark arrester is used, it should be maintained in effective working order by the operator. In the State of California the above is required by law (Section 4442 of the California Public Resources Code). Other states may have similar laws. Federal laws apply on federal lands. A spark arrester for the muffler is available through your nearest engine authorized service dealer or contact the service department, P.O. Box 361131 Cleveland, Ohio 44136-0019.

PRINTED IN U.S.A.

For US Customers: MTD LLC, P.O. BOX 361131 CLEVELAND, OHIO 44136-0019
For Canadian Customers: MTD Products Ltd., P. O. Box 1386, KITCHENER, ONTARIO N2G 4J1

772C0793
02/04/2006

Mtd Mower User Manual

LL Leslie

Mtd Mower User Manual:

This book delves into Mtd Mower User Manual. Mtd Mower User Manual is a crucial topic that needs to be grasped by everyone, ranging from students and scholars to the general public. This book will furnish comprehensive and in-depth insights into Mtd Mower User Manual, encompassing both the fundamentals and more intricate discussions.

1. The book is structured into several chapters, namely:

    - Chapter 1: Introduction to Mtd Mower User Manual
    - Chapter 2: Essential Elements of Mtd Mower User Manual
    - Chapter 3: Mtd Mower User Manual in Everyday Life
    - Chapter 4: Mtd Mower User Manual in Specific Contexts
    - Chapter 5: Conclusion

2. In chapter 1, this book will provide an overview of Mtd Mower User Manual. The first chapter will explore what Mtd Mower User Manual is, why Mtd Mower User Manual is vital, and how to effectively learn about Mtd Mower User Manual.
3. In chapter 2, the author will delve into the foundational concepts of Mtd Mower User Manual. The second chapter will elucidate the essential principles that need to be understood to grasp Mtd Mower User Manual in its entirety.
4. In chapter 3, the author will examine the practical applications of Mtd Mower User Manual in daily life. This chapter will showcase real-world examples of how Mtd Mower User Manual can be effectively utilized in everyday scenarios.
5. In chapter 4, this book will scrutinize the relevance of Mtd Mower User Manual in specific contexts. The fourth chapter will explore how Mtd Mower User Manual is applied in specialized fields, such as education, business, and technology.
6. In chapter 5, this book will draw a conclusion about Mtd Mower User Manual. The final chapter will summarize the key points that have been discussed throughout the book.
   The book is crafted in an easy-to-understand language and is complemented by engaging illustrations. It is highly recommended for anyone seeking to gain a comprehensive understanding of Mtd Mower User Manual.

https://dev.flighttrampolinepark.com/About/browse/fetch.php/larchitecture_de_montreal_guide_des_styles_et_des_batiments.pdf

Table of Contents Mtd Mower User Manual

1. Understanding the eBook Mtd Mower User Manual
    - The Rise of Digital Reading Mtd Mower User Manual
    - Advantages of eBooks Over Traditional Books
2. Identifying Mtd Mower User Manual
    - Exploring Different Genres
    - Considering Fiction vs. Non-Fiction
    - Determining Your Reading Goals
3. Choosing the Right eBook Platform
    - Popular eBook Platforms
    - Features to Look for in an Mtd Mower User Manual
    - User-Friendly Interface
4. Exploring eBook Recommendations from Mtd Mower User Manual
    - Personalized Recommendations
    - Mtd Mower User Manual User Reviews and Ratings
    - Mtd Mower User Manual and Bestseller Lists
5. Accessing Mtd Mower User Manual Free and Paid eBooks
    - Mtd Mower User Manual Public Domain eBooks
    - Mtd Mower User Manual eBook Subscription Services
    - Mtd Mower User Manual Budget-Friendly Options
6. Navigating Mtd Mower User Manual eBook Formats
    - ePub, PDF, MOBI, and More
    - Mtd Mower User Manual Compatibility with Devices
    - Mtd Mower User Manual Enhanced eBook Features
7. Enhancing Your Reading Experience
    - Adjustable Fonts and Text Sizes of Mtd Mower User Manual
    - Highlighting and Note-Taking Mtd Mower User Manual
    - Interactive Elements Mtd Mower User Manual
8. Staying Engaged with Mtd Mower User Manual

- Joining Online Reading Communities
- Participating in Virtual Book Clubs
- Following Authors and Publishers Mtd Mower User Manual

9. Balancing eBooks and Physical Books Mtd Mower User Manual
    - Benefits of a Digital Library
    - Creating a Diverse Reading Collection Mtd Mower User Manual
10. Overcoming Reading Challenges
    - Dealing with Digital Eye Strain
    - Minimizing Distractions
    - Managing Screen Time
11. Cultivating a Reading Routine Mtd Mower User Manual
    - Setting Reading Goals Mtd Mower User Manual
    - Carving Out Dedicated Reading Time
12. Sourcing Reliable Information of Mtd Mower User Manual
    - Fact-Checking eBook Content of Mtd Mower User Manual
    - Distinguishing Credible Sources
13. Promoting Lifelong Learning
    - Utilizing eBooks for Skill Development
    - Exploring Educational eBooks
14. Embracing eBook Trends
    - Integration of Multimedia Elements
    - Interactive and Gamified eBooks

Mtd Mower User Manual Introduction

Free PDF Books and Manuals for Download: Unlocking Knowledge at Your Fingertips In todays fast-paced digital age, obtaining valuable knowledge has become easier than ever. Thanks to the internet, a vast array of books and manuals are now available for free download in PDF format. Whether you are a student, professional, or simply an avid reader, this treasure trove of downloadable resources offers a wealth of information, conveniently accessible anytime, anywhere. The advent of online libraries and platforms dedicated to sharing knowledge has revolutionized the way we consume information. No longer confined to physical libraries or bookstores, readers can now access an extensive collection of digital books and

manuals with just a few clicks. These resources, available in PDF, Microsoft Word, and PowerPoint formats, cater to a wide range of interests, including literature, technology, science, history, and much more. One notable platform where you can explore and download free Mtd Mower User Manual PDF books and manuals is the internets largest free library. Hosted online, this catalog compiles a vast assortment of documents, making it a veritable goldmine of knowledge. With its easy-to-use website interface and customizable PDF generator, this platform offers a user-friendly experience, allowing individuals to effortlessly navigate and access the information they seek. The availability of free PDF books and manuals on this platform demonstrates its commitment to democratizing education and empowering individuals with the tools needed to succeed in their chosen fields. It allows anyone, regardless of their background or financial limitations, to expand their horizons and gain insights from experts in various disciplines. One of the most significant advantages of downloading PDF books and manuals lies in their portability. Unlike physical copies, digital books can be stored and carried on a single device, such as a tablet or smartphone, saving valuable space and weight. This convenience makes it possible for readers to have their entire library at their fingertips, whether they are commuting, traveling, or simply enjoying a lazy afternoon at home. Additionally, digital files are easily searchable, enabling readers to locate specific information within seconds. With a few keystrokes, users can search for keywords, topics, or phrases, making research and finding relevant information a breeze. This efficiency saves time and effort, streamlining the learning process and allowing individuals to focus on extracting the information they need. Furthermore, the availability of free PDF books and manuals fosters a culture of continuous learning. By removing financial barriers, more people can access educational resources and pursue lifelong learning, contributing to personal growth and professional development. This democratization of knowledge promotes intellectual curiosity and empowers individuals to become lifelong learners, promoting progress and innovation in various fields. It is worth noting that while accessing free Mtd Mower User Manual PDF books and manuals is convenient and cost-effective, it is vital to respect copyright laws and intellectual property rights. Platforms offering free downloads often operate within legal boundaries, ensuring that the materials they provide are either in the public domain or authorized for distribution. By adhering to copyright laws, users can enjoy the benefits of free access to knowledge while supporting the authors and publishers who make these resources available. In conclusion, the availability of Mtd Mower User Manual free PDF books and manuals for download has revolutionized the way we access and consume knowledge. With just a few clicks, individuals can explore a vast collection of resources across different disciplines, all free of charge. This accessibility empowers individuals to become lifelong learners, contributing to personal growth, professional development, and the advancement of society as a whole. So why not unlock a world of knowledge today? Start exploring the vast sea of free PDF books and manuals waiting to be discovered right at your fingertips.

FAQs About Mtd Mower User Manual Books

1. Where can I buy Mtd Mower User Manual books? Bookstores: Physical bookstores like Barnes & Noble, Waterstones, and independent local stores. Online Retailers: Amazon, Book Depository, and various online bookstores offer a wide range of books in physical and digital formats.
2. What are the different book formats available? Hardcover: Sturdy and durable, usually more expensive. Paperback: Cheaper, lighter, and more portable than hardcovers. E-books: Digital books available for e-readers like Kindle or software like Apple Books, Kindle, and Google Play Books.
3. How do I choose a Mtd Mower User Manual book to read? Genres: Consider the genre you enjoy (fiction, non-fiction, mystery, sci-fi, etc.). Recommendations: Ask friends, join book clubs, or explore online reviews and recommendations. Author: If you like a particular author, you might enjoy more of their work.
4. How do I take care of Mtd Mower User Manual books? Storage: Keep them away from direct sunlight and in a dry environment. Handling: Avoid folding pages, use bookmarks, and handle them with clean hands. Cleaning: Gently dust the covers and pages occasionally.
5. Can I borrow books without buying them? Public Libraries: Local libraries offer a wide range of books for borrowing. Book Swaps: Community book exchanges or online platforms where people exchange books.
6. How can I track my reading progress or manage my book collection? Book Tracking Apps: Goodreads, LibraryThing, and Book Catalogue are popular apps for tracking your reading progress and managing book collections. Spreadsheets: You can create your own spreadsheet to track books read, ratings, and other details.
7. What are Mtd Mower User Manual audiobooks, and where can I find them? Audiobooks: Audio recordings of books, perfect for listening while commuting or multitasking. Platforms: Audible, LibriVox, and Google Play Books offer a wide selection of audiobooks.
8. How do I support authors or the book industry? Buy Books: Purchase books from authors or independent bookstores. Reviews: Leave reviews on platforms like Goodreads or Amazon. Promotion: Share your favorite books on social media or recommend them to friends.
9. Are there book clubs or reading communities I can join? Local Clubs: Check for local book clubs in libraries or community centers. Online Communities: Platforms like Goodreads have virtual book clubs and discussion groups.
10. Can I read Mtd Mower User Manual books for free? Public Domain Books: Many classic books are available for free as theyre in the public domain. Free E-books: Some websites offer free e-books legally, like Project Gutenberg or Open Library.

Find Mtd Mower User Manual :

larchitecture de montreal guide des styles et des batiments
meteorology today first canadian edition
how to become a supersalesman
~~renault twingo fuse box diagram~~
rainville bedient elementary differential equations solution manual
~~70 th manual satchwell thermostat operating instructions~~
4th grade system notes
~~sell teacher edition books~~
vespa gt200 2005 repair service manual
0 to 100 number line
mini cooper s 2008 fuse box guide
mig welder 195 manual
lodos bar and grill artichoke recipe
~~how to lick inflation before it licks you~~
2014 regional convention notebook

Mtd Mower User Manual :

forty nine minutes of madness the columbine high s copy - Mar 19 2022
web free market madness forty nine minutes of madness forty nine minutes of madnessenslow publishing llc deadly storm alert harvard business press a revised series provides detailed overviews of devastating world disasters weaving together important background information with gripping accounts from survivors and victims
forty nine minutes of madness the columbine high s - Feb 27 2023
web with illustrations by frederic dorr steele forty nine minutes of madness jun 07 2023 examines the tragic shooting at columbine high school on april 20 1999 including detailed reports of the horrific events background on the killers and the aftermath of the shooting provided by publisher after gun violence oct 07 2020
forty nine minutes of madness the columbine high schoo - Aug 04 2023
web aug 1 2012 forty nine minutes of madness the columbine high school shooting judy l hasday 2 61 23 ratings3 reviews april 20 1999 was an ordinary school day for students at columbine high school in littleton colorado classrooms were full of

students finishing their last assignments before final exams

pdf forty nine minutes of madness the columbine high s - Dec 28 2022

web forty nine minutes of madness the columbine high s the iron tiara oct 06 2020 recommended for readers 18 and older due to sexual situations and violence the iron tiara is a spin off novel from the nine minutes trilogy it can be read as a standalone and does not contain a

forty nine minutes of madness the columbine high school - Mar 31 2023

web april 20 1999 was an ordinary school day for students at columbine high school in littleton colorado classrooms were full of students finishing their last assignments before final exams when the bell rang for the first lunch

forty nine minutes of madness the columbine high school - Jul 03 2023

web jan 16 2013 april 20 1999 was an ordinary school day for students at columbine high school in littleton colorado classrooms were full of students finishing their last assignments before final exams when the bell rang for the first lunch period some went outside to enjoy the warm weather

forty nine minutes of madness the columbine high s - Oct 26 2022

web forty nine minutes of madness the columbine high s recognizing the quirk ways to acquire this books forty nine minutes of madness the columbine high s is additionally useful you have remained in right site to start getting this info get the forty nine minutes of madness the columbine high s connect that we allow here and check out the link

forty nine minutes of madness overdrive - Jan 29 2023

web jun 1 2013 april 20 1999 was an ordinary school day for students at columbine high school in littleton colorado classrooms were full of students finishing their last assignments before final exams when the bell rang for the first lunch period some went

forty nine minutes of madness the columbine high s copy - Jun 21 2022

web forty nine minutes of madness enslow publishing llc examines the tragic shooting at columbine high school on april 20 1999 including detailed reports of the horrific events background on the killers and the aftermath of the shooting provided by

forty nine minutes of madness the columbine high s pdf - Aug 24 2022

web sep 28 2023 forty nine minutes of madness the columbine high s 2 6 downloaded from uniport edu ng on september 28 2023 by guest toward therapy blinded him to the complex nature of susan s mental state and how their mutual obsession with each other sealed their fate with lyrical prose pogash skillfully traces the polks story from their early

forty nine minutes of madness the columbine high s pdf - May 21 2022

web columbine high s forty nine minutes of madness the columbine high s book review unveiling the power of words in some sort of driven by information and connectivity the ability of words has be much more evident than ever they have the capacity

to inspire provoke and ignite change such could be the essence of the book

forty nine minutes of madness the columbine high school - Jun 02 2023

web jan 1 2013 0 reviews reviews aren t verified but google checks for and removes fake content when it s

forty nine minutes of madness the columbine high s - Apr 19 2022

web forty nine minutes of madness judy l hasday 2013 01 01 examines the tragic shooting at columbine high school on april 20 1999 including detailed reports of the horrific events background on the killers and the aftermath of the shooting provided by publisher

forty nine minutes of madness the columbine high s - Nov 26 2022

web free market madness forty nine minutes of madness a revised series provides detailed overviews of devastating world disasters weaving together important background information with gripping accounts from survivors and victims

forty nine minutes of madness the columbine high s j - Feb 15 2022

web compulsion currently this forty nine minutes of madness the columbine high s as one of the most practicing sellers here will very be among the best options to review the columbine school shooting louise i gerdes 2012 06 12 this essential volume explores many aspects of the columbine school shootings in april 1999

forty nine minutes of madness the columbine high s 2022 - Jul 23 2022

web 2 forty nine minutes of madness the columbine high s 2022 11 15 information with gripping accounts from survivors and victims school violence enslow publishing llc new york times bestselling author nalini singh welcomes you to a remote town on the edge of the world where even the blinding brightness of the sun can t mask the darkness that

forty nine minutes of madness the columbine high school - May 01 2023

web forty nine minutes of madness the columbine high school shooting hasday judy l amazon sg books

forty nine minutes of madness the columbine high school - Sep 05 2023

web but minutes later the sound of gunfire pierced the peaceful spring day at 11 19 a m two students eric harris and dyland klebold unleashed a long planned murderous assault on their fellow classmates at columbine leaving twelve students and one teacher dead before taking their own lives

forty nine minutes of madness the columbine high school - Oct 06 2023

web language english p cm examines the tragic shooting at columbine high school on april 20 1999 including detailed reports of the horrific events background on the killers and the aftermath of the shooting provided by publisher

forty nine minutes of madness the columbine high s wilson - Sep 24 2022

web columbine such as the role of bullying at the high school the shootings as a symbol of a greater culture of violence and the impact of gun laws on the accessibility of weapons for senior students eric harris and dylan klebold personal narratives

are also featured including columbine high school seniors writing about the impact of

top 100 des meilleures blagues drôles tribunal du net - Mar 30 2022

web within the pages of 100 blagues poilantes dites le avec une blague t pdf an enthralling opus penned by a very acclaimed wordsmith readers attempt an immersive expedition

100 blagues poilantes dites le avec une blague t pdf copy - Feb 26 2022

web aug 27 2023 top 150 des meilleures blagues courtes pour ceux qui aiment l humour de qualité ces blagues sont courtes ces blagues sont un peu nulles et ces blagues

100 blagues poilantes dites le avec une blague t ralph - Jul 14 2023

web n attendez plus et laissez vous porter par l humour décapant du n 3 les blagues poilantes avec la collection dites le avec une blague retrouvez pour les plus

100 blagues poilantes dites le avec une blague t 3 - Aug 15 2023

web 100 blagues poilantes dites le avec une blague 2014 06 20 le meilleur des blagues vraiment poilantes enfin en numérique effet sourire et franche rigolade garanti 100

100 blagues poilantes by dites le avec une blague overdrive - May 12 2023

web jun 20 2014 le meilleur des blagues vraiment poilantes enfin en numérique effet sourire et franche rigolade garanti 100 blagues à déguster parmi

100 blagues poilantes dites le avec une blague t 2022 - Jun 01 2022

web 500 blagues de toto et histoires drôles un moment de pure rigolade 100blagues fr t 8 ebook 100blagues fr amazon fr livres livres

100 blagues poilantes on apple books - Nov 06 2022

web n attendez plus et laissez vous porter par l humour décapant du n 3 les blagues poilantes avec la collection dites le avec une blague retrouvez pour les plus

100 blagues poilantes ebook epub illustré dites le avec une - Jun 13 2023

web jun 20 2014 avec la collection dites le avec une blague retrouvez pour les plus grands thèmes de l humour une sélection des 100 meilleures blagues du genre

100 blagues de toto dites le avec une blague t 2 french - Sep 04 2022

web blagues poilantes avec la collection dites le avec une blague retrouvez pour les plus grands thèmes de l humour une sélection des 100 meilleures blagues du genre

100 blagues poilantes by dites le avec une blague ebook - Apr 11 2023

web 100 blagues poilantes dites le avec une blague t 3 french edition ebook le blagueur masqué amazon co uk kindle store

top 150 blagues courtes les plus drôles topito - Jan 28 2022
web 100 blagues poilantes dites le avec une blague t getting the books 100 blagues poilantes dites le avec une blague t now is not type of challenging means you
100 blagues poilantes dites le avec une blague t 3 french - Mar 10 2023
web 100 blagues poilantes ebook written by dites le avec une blague read this book using google play books app on your pc android ios devices download for offline
100 blagues poilantes ebook by dites le avec une blague - Dec 07 2022
web jun 20 2014 avec la collection dites le avec une blague retrouvez pour les plus grands thèmes de l humour une sélection des 100 meilleures blagues du genre
top 100 des blagues courtes et drôles de2023 blague - Jul 02 2022
web laissez vous porter par l humour décapant du n 3 les blagues poilantes avec la collection dites le avec une blague retrouvez pour les plus grands thèmes de
100 blagues poilantes dites le avec une blague t lucas varela - Dec 27 2021
web novels like this 100 blagues poilantes dites le avec une blague t but end up in harmful downloads rather than reading a good book with a cup of tea in the afternoon
100 blagues poilantes dites le avec une blague t pdf - Aug 03 2022
web si vous êtes à la recherche d une blague courte et qui déchire vous trouverez sur ce site non seulement des blagues en français mais aussi des blagues en anglais des
500 blagues de toto et histoires drôles un moment de pure - Apr 30 2022
web aug 20 2023 1 la blague du mari en taule une femme discute avec une amie j ai un mari en or l autre lui répond moi le mien il est en taule 2 la blague de la
100 blagues poilantes by dites le avec une blague books on - Feb 09 2023
web achetez et téléchargez ebook 100 blagues poilantes dites le avec une blague t 3 boutique kindle littérature humoristique amazon fr
100 blagues poilantes dites le avec une blague t 3 ebook le - Jan 08 2023
web sep 12 2022 read 100 blagues poilantes by dites le avec une blague available from rakuten kobo le meilleur des blagues vraiment poilantes enfin en numérique effet
100 blagues poilantes dites le avec une blague t anne - Nov 25 2021

100 blagues poilantes by dites le avec une blague ebook - Oct 05 2022

web jun 20 2014 avec la collection dites le avec une blague retrouvez pour les plus grands thèmes de l humour une sélection des 100 meilleures blagues du genre

les oiseaux gallimard jeunesse - Aug 09 2022

web les oiseaux des sons à écouter des images à regarder le chant des oiseaux accessible du bout des doigts une immersion sonore pour découvrir le chant du coucou de la mésange de la pie du rossignol et du merle les sons choisis et mixés avec soin enrichissent chaque scène pour la rendre encore plus vivante

chants et cris des oiseaux de france écoutez 311 espèces - Aug 21 2023

web chants et cris des oiseaux de france écoutez 311 espèces chant oiseaux fr chevêche d athéna rouge gorge familier chouette hulotte pinson des arbres merle noir grive musicienne mésange charbonnière grand duc d europe hibou moyen duc mésange bleue pic vert petit duc scops effraie des clochers pic noir a z alaudidés 6

chants d oiseaux de france 28 chants youtube - Jul 20 2023

web may 13 2017 28 oiseaux de france filmés en train de chanter classés par ordre alphabétique accenteur mouchet bergeronnette grise bergeronnette des ruisseaux bergeronnette printanière

comment bien nourrir les oiseaux en hiver france bleu - Dec 01 2021

web nov 20 2023 l hiver est à nos portes nous entrons dans la période de nourrissage des oiseaux est ce utile et comment bien faire olivier cattiaux est parti à la rencontre d un professionnel de la lpo

montélimar un lieu neutre pour examiner écouter et protéger les - Jul 28 2021

web 1 day ago un lieu neutre pour examiner écouter et protéger les mineurs violentés l unité d accueil pédiatrique enfants en danger uaped située sur le site du val de beausseret du groupement

chants d oiseaux de france 30 chants youtube - Oct 23 2023

web 30 oiseaux de france filmés en train de chanter filmé avec panasonic lumix dc g9 camera amzn to 43sn9ut avec 100 400 leica dg vario elmar camera lens amzn to 45nkl3k more

les oiseaux que l on entend au mois d avril apprendre les youtube - Jul 08 2022

web apr 9 2021 introduction les oiseaux que l on entend au mois d avril apprendre les chants d oiseaux studio les trois becs 25 7k subscribers subscribe 9 1k 360k views 2 years ago c est la

chant des oiseaux relaxant youtube - Mar 04 2022

web may 26 2016 bonjour chant des oiseaux relaxantbruit de la nature chant des oiseaux de la forêt chant des oiseauxthis video is useful for people helps you sleep trea

bruits et chants oiseaux universal soundbank com - Jan 02 2022

web téléchargez et écoutez des chants et sons d oiseaux enregistrés et disponibles sur les banques de sons gratuites en ligne

d universal soundbank pour tous les musiciens cinéastes studios d enregistrements djs réalisateurs soundesigners et tous ceux recherchant des sons de qualité professionnelle universal soundbank

apprend à reconnaître les oiseaux et leur chant birdie memory - Sep 10 2022

web un jeu pédagogique un parcours ludique permet de mémoriser les principaux chants en seulement quelques minutes un outil de sensibilisation petits et grands prêteront désormais l oreille lors des balade dans la nature ou en ville les oiseaux birdie memory sont disponibles en différents formats poster livre cartes postales exposition

chants d oiseaux de france partie 1 youtube - Jun 19 2023

web chants d oiseaux de france partie 1 oetincelleo 3 08k subscribers subscribe 5 4k share save 2 3m views 15 years ago diaporama d oiseaux et leurs chants show more

oiseaux toute l actualité et les podcasts à écouter - Apr 05 2022

web toute l actualité oiseaux sur radio france podcasts à écouter gratuitement en ligne et depuis l application avec les dernières actualités et débats

pourquoi et comment tous les animaux prennent soin de leurs - Sep 29 2021

web nov 21 2023 découvrons comment les animaux tous les animaux des invertébrés aux mammifères en passant par les oiseaux les poissons les amphibiens et les reptiles prennent soin de leurs petits

oiseau sons gratuits lasonotheque - Jun 07 2022

web 118 résultats pour oiseau du plus au moins téléchargé page 1 sur 3 catégorie s proposée s ambiance foret ambforst autres essayez oiseau diurne oiseau nocturne oisillon forêt chant d oiseaux route au loin mouche catégorie ucs ambforst durée 00 54 d infos téléchargements vagues et sternes

chant des oiseaux 2 heures se détendre et dormir youtube - Dec 13 2022

web oct 20 2014 chant des oiseaux musique zen de la nature pour se détendre méditer dormir et étudier nature harmonie relax et bien etre

oiseaux du québec chants et cris 1 youtube - May 18 2023

web mar 24 2017 oiseaux du québec chants et cris 1 annie g oiseaux et nature 11 7k subscribers subscribed l i k e share 448k views 6 years ago regardez aussi 73 chants et cris d oiseaux du

apprendre les chants d oiseaux youtube - Apr 17 2023

web apprendre les chants d oiseaux studio les trois becs 48 videos 1 232 754 views last updated on jun 15 2023 le son de la semaine est une petite encyclopédie sonore des chants d oiseaux qui s

les majestueux vols en v des oiseaux migrateurs france bleu - Aug 29 2021

web nov 21 2023 ecoutons les chants des oiseaux en compagnie de la ligue pour la protection des oiseaux en moselle 55 min

À lire aussi le 22 11 2022
comment les oiseaux marins affrontent ils les tempêtes - Oct 31 2021
web nov 11 2023 il en est ressorti vivant contrairement à une idée reçue ce n est pas le vent violent qui tue les oiseaux en plein océan mais la faim comme la montré en 2021 une étude du cnrs sur les
reconnaissance des chants d oiseaux inventaire national du - Jun 26 2021
web programmes jeux inpn jeu des chants d oiseaux apprendre à reconnaître les chants d oiseaux série en cours d écoute les Ã missions vocales simples composÃ es de deux types de sons 2 testez vos connaissances sur cette série changer de série sélectionnez un chant d oiseau à écouter chant mésange charbonnière parus major
70 chants d oiseaux du jardin bird songs from the garden - Feb 15 2023
web Écoute 70 chants d oiseaux du jardin bird songs from the garden par fernand deroussen sur deezer accenteur mouchet alouette des champs bergeronnette grise
animaux découvrir le livre 50 idées fausses sur les oiseaux - May 06 2022
web nov 20 2023 est ce que les oiseaux sont sales À travers 50 fiches couvrant tous les aspects de l évolution de la biologie et de l écologie frédéric archaud dresse l état des connaissances les plus récentes sur les oiseaux et leurs singularités dans ce livre l auteur se sert des idées reçues sur les oiseaux pour nous permettre d
ecoute les oiseaux édition 2023 Éditions albin michel - Oct 11 2022
web 1 livre 1 application une expérience immersive dans le monde fascinant des oiseaux découvre 20 oiseaux de ton quotidien anime les pour les faire chanter et entraîne toi à les reconnaître date de parution 03 avril 2023 Édition cartonnée 19 90 acheter le livre
ecouter les oiseaux dictionnaire des animaux diconimoz - Jan 14 2023
web ecouter les oiseaux listen birds apprenez à identifier les oiseaux grâce à leurs chants en cliquant sur les vignettes correspondantes accenteur mouchet ecoutez bergeronnette grise ecoutez buse variable ecoutez butor étoilé ecoutez canard mandarin ecoutez cigogne blanche ecoutez cygne tuberculé ecoutez etourneau
reconnaissance des chants d oiseaux inpn mnhn fr - Nov 12 2022
web jeux inpn jeu des chants d oiseaux apprendre à reconnaître les chants d oiseaux série en cours d écoute les chants des milieux forestiers 1 testez vos connaissances sur cette série changer de série sélectionnez un chant d oiseau à écouter chant roitelet huppé regulus regulus votre navigateur ne supporte pas l élément lecteur audio
bruits de la nature chants des oiseaux musique relaxante - Feb 03 2022
web may 12 2015 relaxation zen avec bruits de la nature chants des oiseaux et bruit de l eau musique relaxante de la nature belle nature avec lac et forêt apaiser se détendre se calmer l étude et le

oiseaux sons gratuits lasonotheque - May 26 2021
web oiseaux sons gratuits lasonotheque 118 résultats pour oiseaux du plus au moins téléchargé page 1 sur 3 catégorie s proposée s ambiance foret ambforst autres essayez oiseau diurne oiseau nocturne oisillon forêt chant d oiseaux route au loin mouche catégorie ucs ambforst durée 00 54 d infos téléchargements
10 chants d oiseaux du jardin en vidéo pour les youtube - Sep 22 2023
web mar 18 2022 au printemps c est un bonheur d entendre les oiseaux chanter mais il peut être difficile de bien les reconnaître alors voici 10 chants d oiseaux communs d
ecoutez les oiseaux chanter c est dans ta nature rfi - Mar 16 2023
web may 8 2021 stanislas wroza écoute les oiseaux enregistre leurs chants et leurs cris les répertorie et comme des centaines de bénévoles participe à enrichir l inpn l inventaire national du