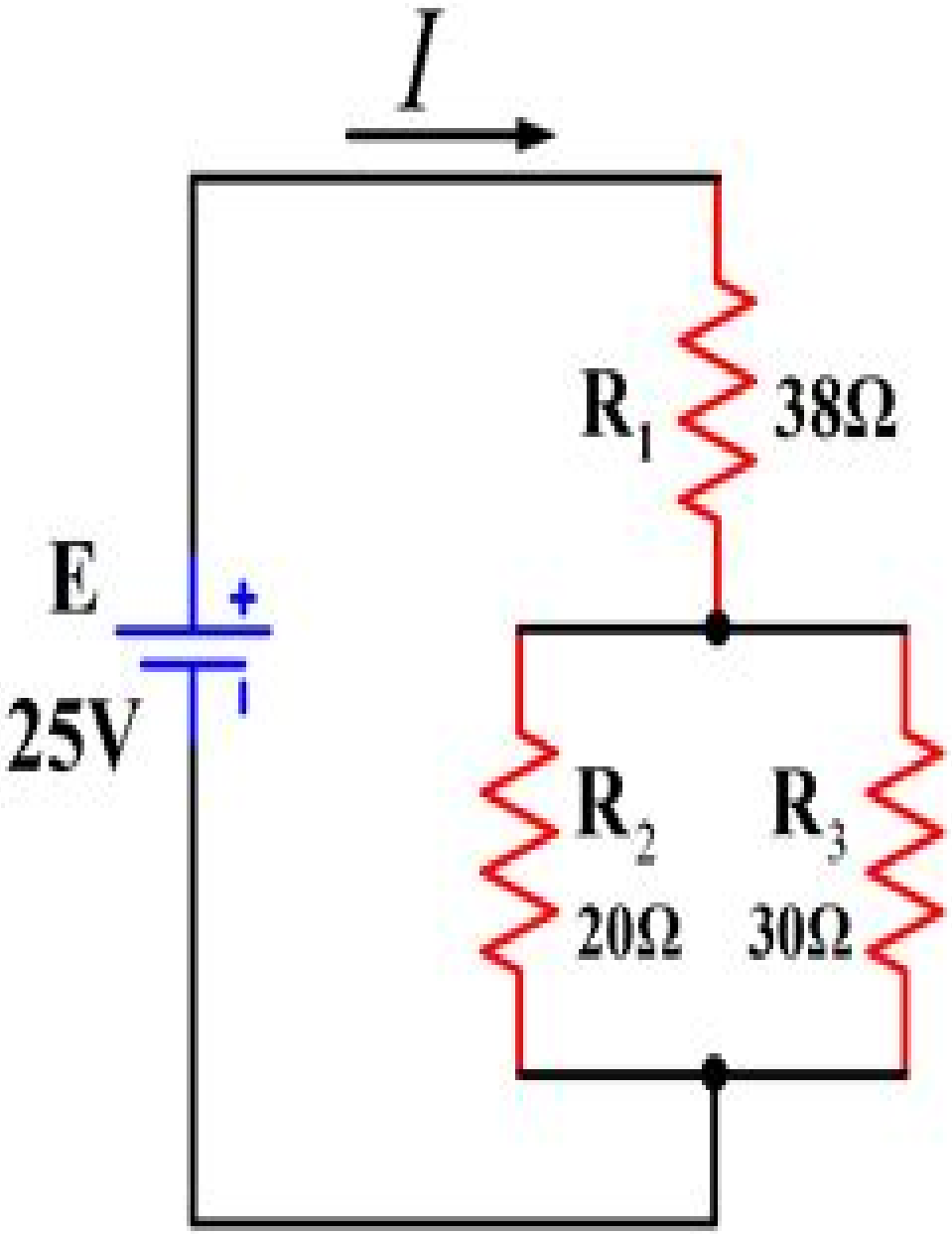

(a) Series-Parallel Resistor Circuit

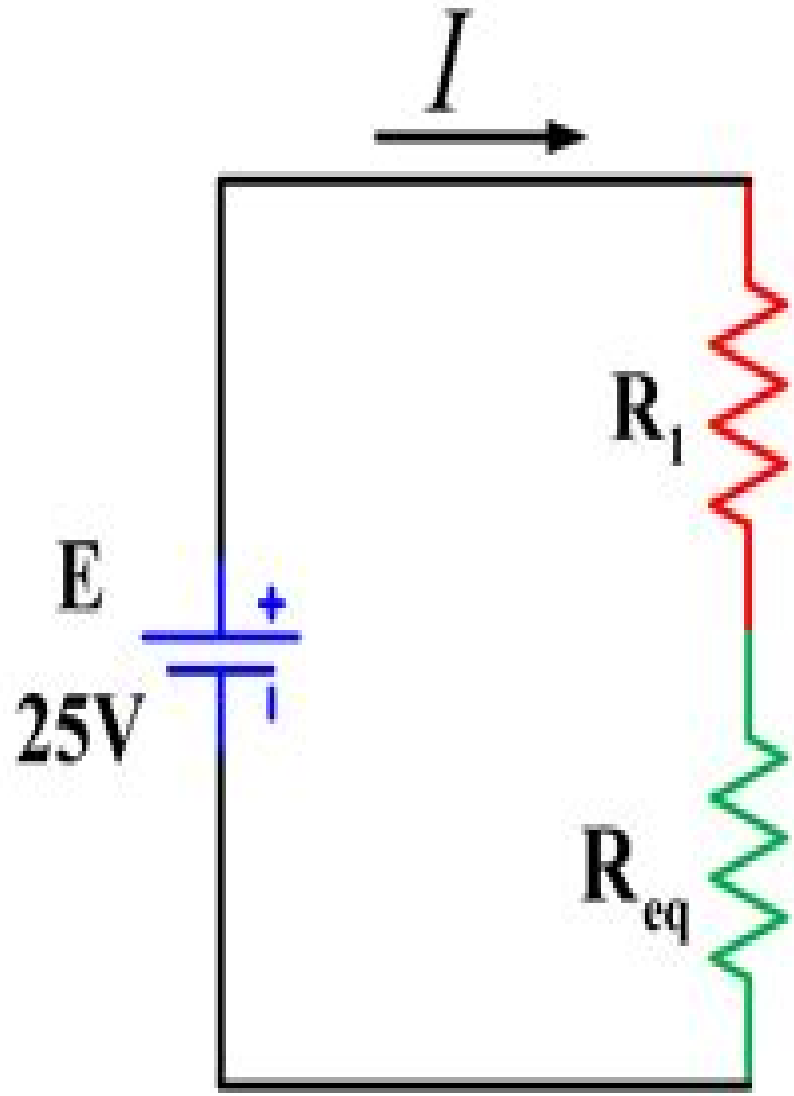

(b) Equivalent Series Circuit

Simple Series Parallel Circuit Problems

K Payea

Simple Series Parallel Circuit Problems:

Simple Series Parallel Circuit Problems Book Review: Unveiling the Power of Words

In a global driven by information and connectivity, the power of words has be more evident than ever. They have the ability to inspire, provoke, and ignite change. Such is the essence of the book **Simple Series Parallel Circuit Problems**, a literary masterpiece that delves deep in to the significance of words and their effect on our lives. Written by a renowned author, this captivating work takes readers on a transformative journey, unraveling the secrets and potential behind every word. In this review, we will explore the book is key themes, examine its writing style, and analyze its overall effect on readers.

https://dev.flighttrampolinepark.com/results/book-search/fetch.php/how_to_survive_and_prosper_as_an_artist.pdf

Table of Contents Simple Series Parallel Circuit Problems

1. Understanding the eBook Simple Series Parallel Circuit Problems
    - The Rise of Digital Reading Simple Series Parallel Circuit Problems
    - Advantages of eBooks Over Traditional Books
2. Identifying Simple Series Parallel Circuit Problems
    - Exploring Different Genres
    - Considering Fiction vs. Non-Fiction
    - Determining Your Reading Goals
3. Choosing the Right eBook Platform
    - Popular eBook Platforms
    - Features to Look for in an Simple Series Parallel Circuit Problems
    - User-Friendly Interface
4. Exploring eBook Recommendations from Simple Series Parallel Circuit Problems
    - Personalized Recommendations
    - Simple Series Parallel Circuit Problems User Reviews and Ratings
    - Simple Series Parallel Circuit Problems and Bestseller Lists
5. Accessing Simple Series Parallel Circuit Problems Free and Paid eBooks

- Simple Series Parallel Circuit Problems Public Domain eBooks
- Simple Series Parallel Circuit Problems eBook Subscription Services
- Simple Series Parallel Circuit Problems Budget-Friendly Options

6. Navigating Simple Series Parallel Circuit Problems eBook Formats
    - ePub, PDF, MOBI, and More
    - Simple Series Parallel Circuit Problems Compatibility with Devices
    - Simple Series Parallel Circuit Problems Enhanced eBook Features
7. Enhancing Your Reading Experience
    - Adjustable Fonts and Text Sizes of Simple Series Parallel Circuit Problems
    - Highlighting and Note-Taking Simple Series Parallel Circuit Problems
    - Interactive Elements Simple Series Parallel Circuit Problems
8. Staying Engaged with Simple Series Parallel Circuit Problems
    - Joining Online Reading Communities
    - Participating in Virtual Book Clubs
    - Following Authors and Publishers Simple Series Parallel Circuit Problems
9. Balancing eBooks and Physical Books Simple Series Parallel Circuit Problems
    - Benefits of a Digital Library
    - Creating a Diverse Reading Collection Simple Series Parallel Circuit Problems
10. Overcoming Reading Challenges
    - Dealing with Digital Eye Strain
    - Minimizing Distractions
    - Managing Screen Time
11. Cultivating a Reading Routine Simple Series Parallel Circuit Problems
    - Setting Reading Goals Simple Series Parallel Circuit Problems
    - Carving Out Dedicated Reading Time
12. Sourcing Reliable Information of Simple Series Parallel Circuit Problems
    - Fact-Checking eBook Content of Simple Series Parallel Circuit Problems
    - Distinguishing Credible Sources
13. Promoting Lifelong Learning
    - Utilizing eBooks for Skill Development

- Exploring Educational eBooks
14. Embracing eBook Trends
    - Integration of Multimedia Elements
    - Interactive and Gamified eBooks

Simple Series Parallel Circuit Problems Introduction

In this digital age, the convenience of accessing information at our fingertips has become a necessity. Whether its research papers, eBooks, or user manuals, PDF files have become the preferred format for sharing and reading documents. However, the cost associated with purchasing PDF files can sometimes be a barrier for many individuals and organizations. Thankfully, there are numerous websites and platforms that allow users to download free PDF files legally. In this article, we will explore some of the best platforms to download free PDFs. One of the most popular platforms to download free PDF files is Project Gutenberg. This online library offers over 60,000 free eBooks that are in the public domain. From classic literature to historical documents, Project Gutenberg provides a wide range of PDF files that can be downloaded and enjoyed on various devices. The website is user-friendly and allows users to search for specific titles or browse through different categories. Another reliable platform for downloading Simple Series Parallel Circuit Problems free PDF files is Open Library. With its vast collection of over 1 million eBooks, Open Library has something for every reader. The website offers a seamless experience by providing options to borrow or download PDF files. Users simply need to create a free account to access this treasure trove of knowledge. Open Library also allows users to contribute by uploading and sharing their own PDF files, making it a collaborative platform for book enthusiasts. For those interested in academic resources, there are websites dedicated to providing free PDFs of research papers and scientific articles. One such website is Academia.edu, which allows researchers and scholars to share their work with a global audience. Users can download PDF files of research papers, theses, and dissertations covering a wide range of subjects. Academia.edu also provides a platform for discussions and networking within the academic community. When it comes to downloading Simple Series Parallel Circuit Problems free PDF files of magazines, brochures, and catalogs, Issuu is a popular choice. This digital publishing platform hosts a vast collection of publications from around the world. Users can search for specific titles or explore various categories and genres. Issuu offers a seamless reading experience with its user-friendly interface and allows users to download PDF files for offline reading. Apart from dedicated platforms, search engines also play a crucial role in finding free PDF files. Google, for instance, has an advanced search feature that allows users to filter results by file type. By specifying the file type as "PDF," users can find websites that offer free PDF downloads on a specific topic. While downloading Simple Series Parallel Circuit Problems free PDF files is convenient, its important to note that copyright laws must be respected. Always ensure that the

PDF files you download are legally available for free. Many authors and publishers voluntarily provide free PDF versions of their work, but its essential to be cautious and verify the authenticity of the source before downloading Simple Series Parallel Circuit Problems. In conclusion, the internet offers numerous platforms and websites that allow users to download free PDF files legally. Whether its classic literature, research papers, or magazines, there is something for everyone. The platforms mentioned in this article, such as Project Gutenberg, Open Library, Academia.edu, and Issuu, provide access to a vast collection of PDF files. However, users should always be cautious and verify the legality of the source before downloading Simple Series Parallel Circuit Problems any PDF files. With these platforms, the world of PDF downloads is just a click away.

FAQs About Simple Series Parallel Circuit Problems Books

What is a Simple Series Parallel Circuit Problems PDF? A PDF (Portable Document Format) is a file format developed by Adobe that preserves the layout and formatting of a document, regardless of the software, hardware, or operating system used to view or print it. **How do I create a Simple Series Parallel Circuit Problems PDF?** There are several ways to create a PDF: Use software like Adobe Acrobat, Microsoft Word, or Google Docs, which often have built-in PDF creation tools. Print to PDF: Many applications and operating systems have a "Print to PDF" option that allows you to save a document as a PDF file instead of printing it on paper. Online converters: There are various online tools that can convert different file types to PDF. **How do I edit a Simple Series Parallel Circuit Problems PDF?** Editing a PDF can be done with software like Adobe Acrobat, which allows direct editing of text, images, and other elements within the PDF. Some free tools, like PDFescape or Smallpdf, also offer basic editing capabilities. **How do I convert a Simple Series Parallel Circuit Problems PDF to another file format?** There are multiple ways to convert a PDF to another format: Use online converters like Smallpdf, Zamzar, or Adobe Acrobats export feature to convert PDFs to formats like Word, Excel, JPEG, etc. Software like Adobe Acrobat, Microsoft Word, or other PDF editors may have options to export or save PDFs in different formats. **How do I password-protect a Simple Series Parallel Circuit Problems PDF?** Most PDF editing software allows you to add password protection. In Adobe Acrobat, for instance, you can go to "File" -> "Properties" -> "Security" to set a password to restrict access or editing capabilities. Are there any free alternatives to Adobe Acrobat for working with PDFs? Yes, there are many free alternatives for working with PDFs, such as: LibreOffice: Offers PDF editing features. PDFsam: Allows splitting, merging, and editing PDFs. Foxit Reader: Provides basic PDF viewing and editing capabilities. How do I compress a PDF file? You can use online tools like Smallpdf, ILovePDF, or desktop software like Adobe Acrobat to compress PDF files without significant quality loss. Compression reduces the file size, making it easier to share and download. Can I fill out forms in a PDF file? Yes, most PDF viewers/editors like Adobe Acrobat, Preview (on Mac), or various online tools allow you to fill out

forms in PDF files by selecting text fields and entering information. Are there any restrictions when working with PDFs? Some PDFs might have restrictions set by their creator, such as password protection, editing restrictions, or print restrictions. Breaking these restrictions might require specific software or tools, which may or may not be legal depending on the circumstances and local laws.

Find Simple Series Parallel Circuit Problems :

how to survive and prosper as an artist
2003 acura tl camshaft seal manual
sociological theory george ritzer 8th edition
~~value of 2000 ford expedition eddie bauer~~
biology hl paper may 2011
interethnic companion to asian american literature
question paper 0580 32 may june 2014
year 5 naplan test papers
network printer manual
~~zenith zn 311 manual~~
lodysseacutee de zozimos tome
practice 8 4 properties of logarithms
walther ppk s manual
mitsubishi l200 service manual 2009
modern biology study guide answer key biochemistry

Simple Series Parallel Circuit Problems :

fuite en Égypte des premiers blessés et réfugiés gazaouis le - Oct 13 2021
web nov 2 2023 la rupture de confiance entre les autorités et les acteurs humanitaires symbolisée par l expulsion du coordinateur des affaires humanitaires de l onu en
vivre lurgence organisations abebooks - Feb 14 2022
web dec 1 2005 vivre l urgence dans les organisations on amazon com free shipping on qualifying offers vivre l urgence dans les organisations

vivre l urgence dans les organisations amazon com au books - Mar 18 2022
web vivre l urgence dans les organisations by grec o groupe de recherches en communication des organisations and a great selection of related books art and
vivre l urgence dans les organisations librairie eyrolles - Aug 23 2022
web achat vivre l urgence dans les organisations à prix bas sur rakuten si vous êtes fan de lecture depuis des années découvrez sans plus tarder toutes nos offres et nos
vivre l urgence dans les organisations 2022 vps huratips - Nov 13 2021
web nov 1 2023 des gazaouis possédant la double nationalité se dirigent vers le poste frontière de rafah dans l espoir de pouvoir passer en Égypte reuters arafat
vivre l urgence dans les organisations amazon fr - Oct 25 2022
web vivre l urgence dans les organisations communication des organisation ebook carayol valérie nicole denoit stéphanie dillière brooks ghyslaine thorion collectif
vivre l urgence dans les organisations paperback amazon com - Jan 16 2022
web oct 23 2023 israël et l Égypte voisine ont restreint la circulation des biens et des personnes à l intérieur et à l extérieur de gaza depuis que le hamas a pris le contrôle du
vivre l urgence dans les organisations apple books - Jan 28 2023
web les technologies de communication sont montrées du doigt dans ce mouvement qui semble inexorable et qui affecte les organisations mais sont elles vraiment la cause de
vivre l urgence dans les organisations ebok valerie carayol - Jun 20 2022
web select the department you want to search in
vivre l urgence dans les organisations amazon ca - May 20 2022
web jan 13 2006 vivre l urgence dans les organisations valérie carayol nicole denoit stéphanie dillière brooks ghyslaine thorion collectif note moyenne donner le premier
vivre l urgence dans les organisations - Sep 04 2023
web l urgence a de multiples visages dans les organisations que les auteurs de cet ouvrage ont entrepris d explorer pour essayer d en mesurer la complexité car les organisations
vivre l urgence dans les organisations communication des - Sep 23 2022
web l urgence est devenue une temporalité ordinaire les technologies de communication sont montrées du doigt dans ce mouvement qui semble inexorable et qui affecte les
rocher vs demol europétanque des alpes maritimes 2023 - Jul 10 2021

web laura dave media vous permet de suivre en ce moment la cérémonie du ballon d or officiel soyez les témoins de ce duel privilégié entre messi et halland

le management de l urgence dans les organisations - Oct 05 2023

web les organisations vivent au quotidien dans l urgence et veulent se penser sous le signe du projet de l anticipation de la pro activité et de la veille stratégique elles vendent de

vivre l urgence dans les organisations rakuten - Jul 22 2022

web l urgence est devenue une temporalite ordinaire les technologies de communication sont montrees du doigt dans ce mouvement qui semble inexorable et qui affecte les

guerre israël hamas à gaza de quoi les gens ont ils besoin - Dec 15 2021

web vivre l urgence dans les organisations 1 vivre l urgence dans les organisations mieux vivre avec un diabète coexister l urgence de vivre ensemble digital health

guerre israël hamas à gaza tsahal lance incursion ciblée - Aug 11 2021

web rocher vs demol europétanque des alpes maritimes 2023 à cagnes sur mer rejoignez cette chaîne pour bénéficier d avantages exclusifs

vivre l urgence dans les organisations worldcat org - Nov 25 2022

web les organisations vivent au quotidien dans l urgence et veulent se penser sous le signe du projet de l anticipation de la pro activité et de la veille stratégique elles vendent de

vivre l urgence dans les organisations groupe de recherche en - Dec 27 2022

web réunit les contributions de plusieurs séminaires du greco groupe de recherches en communication des organisations de l université de bordeaux 3 tenus à bordeaux et

vivre l urgence dans les organisations google books - Aug 03 2023

web dans un contexte où les préoccupations environnementales sont à juste titre croissantes les entreprises et les organisations en général surfent de plus en plus sur la vague

vivre l urgence dans les organisations academia edu - Apr 30 2023

web without difficulty as insight of this vivre l urgence dans les organisations can be taken as well as picked to act gestion de crise catherine piednoël 2021 11 18 manageor 3e

vivre l urgence dans les organisations request pdf - Jul 02 2023

web les organisations vivent au quotidien dans l urgence et veulent se penser sous le signe du projet de l anticipation de la pro activité et de la veille stratégique elles

vivre l urgence dans les organisations collectif cultura - Feb 26 2023

web dec 1 2005 l urgence est devenue une temporalité ordinaire les technologies de communication sont montrées du doigt dans ce mouvement qui semble inexorable et qui

vivre l urgence dans les organisations de valérie carayol decitre - Apr 18 2022

web select the department you want to search in

sport ballon d or 2023 qui sera le vainqueur laura - Jun 08 2021

vivre l urgence dans les organisations - Mar 30 2023

web les organisations vivent au quotidien dans l urgence et veulent se penser sous le signe du projet de l anticipation de la pro activité et de la veille stratégique elles vendent de

vivre l urgence dans les organisations google books - Jun 01 2023

web les organisations vivent au quotidien dans l urgence et veulent se penser sous le signe du projet de l anticipation de la pro activité et de la veille stratégique elles vendent de

burkina faso des groupes armés commettent des crimes de - Sep 11 2021

web oct 26 2023 depuis l attaque du hamas contre la population israélienne le 7 octobre qui a fait plus de 1 400 morts et plus de 200 personnes prises en otages israël mène une

dennett un naturalisme en chantier philosophies t daniel - Aug 07 2022

web 2 dennett un naturalisme en chantier philosophies t 2019 10 13 étant dans le même temps dénigré malmené incompris par nombre de nos contemporains même dans le

dennett un naturalisme en chantier philosophies t 2023 - Sep 08 2022

web concerning the costs its practically what you habit currently this dennett un naturalisme en chantier philosophies t as one of the most in force sellers here will enormously

dennett un naturalisme en chantier philosophies t pdf - May 16 2023

web dennett un naturalisme en chantier john symons on free shipping on qualifying offers achetez dennett un naturalisme en chantier en ligne sur puf le plus vaste choix des

dennett un naturalisme en chantier 9782130636106 ebook - Nov 10 2022

web 2 dennett un naturalisme en chantier philosophies t 2023 10 19 faith and reason mysticism and empirical data the neurological basis of how the brain identifies the

dennett un naturalisme en chantier philosophies t - Nov 29 2021

dennett un naturalisme en chantier philosophies t 186 by john - Apr 15 2023

web jan 1 2005 bien que dennett ne se considère pas comme un spinoziste plusieurs auteurs ont discuté les similitudes importantes entre ces deux philosophies naturalistes

dennett un naturalisme en chantier philosophies t 2022 - May 04 2022

web dennett un naturalisme en chantier philosophies t downloaded from stage gapinc com by guest jaxon townsend on dennett presses universitaires de france puf

dennett un naturalisme en chantier philosophies t 2023 - Mar 02 2022

web dennett un naturalisme en chantier philosophies t 3 3 confrontation mais sans engager un véritable débat l auteur tente modestement de proposer une analyse

dennett un naturalisme en chantier john symons - Sep 20 2023

web cet ouvrage se propose de présenter le naturalisme philosophique au travers d une analyse des travaux du philosophe américain daniel dennett fervent défenseur de la

dennett un naturalisme en chantier philosophies t pdf dotnbm - Feb 01 2022

web dennett un naturalisme en chantier philosophies t the oxford handbook of medieval philosophy sep 15 2022 this handbook is intended to show the links between the

dennett un naturalisme en chantier philosophies t copy assetj - Jul 18 2023

web in this landmark book daniel dennett refutes the traditional commonsense theory of consciousness and presents a new model based on a wealth of information from the

dennett un naturalisme en chantier request pdf researchgate - Mar 14 2023

web cet ouvrage se propose de prsenter le naturalisme philosophique au travers d une analyse des travaux du philosophe amricain daniel dennett farouchement oppos toute

read free dennett un naturalisme en chantier philosophies t - Dec 11 2022

web dennett un naturalisme en chantier 9782130636106 ebook philosophie ebook arts culture société cultura dennett un naturalisme en chantier aux éditions puf

une introduction au naturalisme quinéen cairn info - Jan 12 2023

web dennett un naturalisme en chantier philosophies t defeat and division aug 30 2020 defeat and division launches a definitive new account of france in the second world

dennett un naturalisme en chantier philosophies t pdf - Jun 17 2023

web l enjeu de la cure la transformation silencieuse par rapport à l exigence de l action et de son résultat autant d approches qui font découvrir la psychanalyse sous un jour

dennett un naturalisme en chantier philosophies t pdf ftp - Jul 06 2022

web méthode naturaliste à l oeuvre comme le septicisme le naturalisme est une attitude philosophique optimiste et progressiste plus qu un ensemble de croyances le

dennett un naturalisme en chantier philosophies t stage gapinc - Apr 03 2022

web dennett un naturalisme en chantier philosophies t 3 3 emphasis on active agenthood and multi modal systems it is accessible to researchers and graduate students in

dennett un naturalisme en chantier philosophies t book - Dec 31 2021

web l auteur tente modestement de proposer une analyse détaillée des arguments respectifs des deux parties sur cette question de la métaphore pour cerner les enjeux et les

dennett un naturalisme en chantier philosophies t book - Feb 13 2023

web créer un compte accès institution vous n êtes actuellement pas connecté e en institution authentifiez vous language you are currently viewing the french edition of our site

dennett un naturalisme en chantier philosophies t - Oct 21 2023

web l alternative que développe cet ouvrage rejette l identification de la nature aux seuls contenus des sciences naturelles et l abandon de vastes secteurs du monde

dennett un naturalisme en chantier philosophies t copy - Jun 05 2022

web dennett un naturalisme en chantier philosophies t 3 3 pour les exploiter dans des interfaces neurocognitiv es contestables mais à un renouvelleme nt de l étude

dennett un naturalisme en chantier john symons cairn info - Aug 19 2023

web 4 dennett un naturalisme en chantier philosophies t 2022 02 13 s ouvre t elle à la transcendance sécularisation et laïcité university of toronto press machaivel n est

dennett un naturalisme en chantier philosophies t pdf - Oct 09 2022

web une mise en perspective avec la théorie biologique de l autopoïèse élaborée par f varela et h maturana l enjeu final est de proposer une théorie de la biologie qui respecte son

il piccolo yogi yoga per bambini felici - Jul 02 2022

web usa queste 45 carte interattive con i tuoi bambini per i vostri momenti di divertimento e relax giochi di cooperazione giochi di ascolto e di apprendimento uno strumento per crescere insieme il cofanetto contiene 45 carte a colori e

i 10 migliori libri sullo yoga per bambini notizie scientifiche it - Jan 28 2022

web jan 17 2023 il metodo balyayoga yoga per bambini ladisa barbara zollo gianni fusco laura illustratore 2019 112 il piccolo yogi yoga per bambini felici con 45 carte giannò arathi sabrina battiati d illustratore 2014 144 chiudi gli occhi e respira yoga meditazione e mindfulness per ragazzi

il piccolo yogi yoga per bambini felici con 45 carte - Jun 01 2022
web compre online il piccolo yogi yoga per bambini felici con 45 carte de giannò arathi sabrina battiati d na amazon frete grÁtis em milhares de produtos com o amazon prime encontre diversos livros em inglês e outras línguas com ótimos preços
il piccolo yogi arathi sabrina giannò ananda edizioni libro di yoga - Sep 04 2022
web utilissime per interpretare lo yoga con i bambini in modo divertente ed entusiasta e un fantastico contributo per accompagnare la crescita dei nostri bambini accattivanti nel decoro aiutano a sviluppare immediatamente creatività e partecipazione gioiosa
9788897586562 il piccolo yogi yoga per bambini felici con 45 - Mar 30 2022
web 9788897586562 il piccolo yogi yoga per bambini felici con 45 carte arathi sa eur 26 90 in vendita arathi sabrina giannò d battiati autore arathi sabrina giannò d battiati il piccolo yogi 295922916578
il piccolo yogi yoga per bambini felici con 45 ca copy - Dec 27 2021
web il piccolo yogi yoga per bambini felici con 45 ca 3 3 alcuni profondi discorsi di swami kriyananda sull antica scienza del kriya yoga vi troverai indicazioni pratiche che potranno esserti di grande ispirazione e di aiuto lungo il cammino che conduce alla scoperta del tuo più alto sé lo yoga di yogananda ananda edizioni la pratica quotidiana
il piccolo yogi yoga per bambini felici con 45 carte - Jun 13 2023
web yoga per bambini felici con 45 carte arathi sabrina giannò libro mondadori store libri donne salute benessere self help mente corpo spirito 1 image not found img piccolo yogi yoga bambini arathi sabrina gianno ea978889758656 bl bl 63 nzo tit il piccolo yogi yoga per bambini felici con 45 carte aut arathi sabrina giann c3 b2
il piccolo yogi yoga per bambini felici libro 45 carte - Feb 09 2023
web scopri il piccolo yogi yoga per bambini felici libro 45 carte interattive di arathi sabrina giannò pubblicato da ananda edizioni su giunti al punto e in tutti gli store giunti consulta il catalogo online
il piccolo yogi yoga per bambini felici con 45 carte - Oct 05 2022
web con 45 carte giannò arathi sabrina ananda edizioni trama libro 9788897586562 libreria universitaria il piccolo yogi yoga per bambini felici con 45 carte libro di arathi sabrina giannò acquistalo con spedizione gratuita su libreriauniversitaria it
il piccolo yogi yoga per bambini felici goodreads - Apr 30 2022
web read reviews from the world s largest community for readers un modo nuovo e creativo per sviluppare le qualità più elevate dei bambini in questo cofanett
il piccolo yogi yoga per bambini felici con 45 carte - Jul 14 2023
web il piccolo yogi yoga per bambini felici con 45 carte è un libro di arathi sabrina giannò pubblicato da ananda edizioni acquista su ibs a 25 56

amazon it yoga per bambini - Nov 06 2022
web oppure consegna più rapida domani 11 lug disponibilità solo 8 ordina subito ulteriori in arrivo altro formato copertina flessibile yoga con i tuoi bambini oltre 70 posizioni yoga per bambini da 3 a 11 anni ediz illustrata di juliet pegrum
il piccolo yogi yoga per bambini felici con 45 carte - Dec 07 2022
web il piccolo yogi yoga per bambini felici con 45 carte è un libro scritto da arathi sabrina giannò pubblicato da ananda edizioni libraccio it
il piccolo yogi yoga per bambini felici con 45 carte - May 12 2023
web il piccolo yogi yoga per bambini felici con 45 carte giannò arathi sabrina battiati d isbn 9788897586562 kostenloser versand für alle bücher mit versand und verkauf duch amazon
piccoli yogi - Feb 26 2022
web piccoli yogi yoga per bambini alla scoperta dello yoga con angela conte 3 6 anni 7 12 anni gioco movimento equilibrio respiro relax per info
il piccolo yogi yoga per bambini felici con 45 carte amazon de - Jan 08 2023
web il piccolo yogi yoga per bambini felici con 45 carte giannò arathi sabrina battiati d amazon de books
il piccolo yogi yoga per bambini felici con 45 carte - Aug 15 2023
web scopri il piccolo yogi yoga per bambini felici con 45 carte di giannò arathi sabrina battiati d spedizione gratuita per i clienti prime e per ordini a partire da 29 spediti da amazon
il piccolo yogi yoga per bambini felici con 45 carte - Apr 11 2023
web yoga per bambini felici con 45 carte è un libro di arathi sabrina giannò pubblicato da ananda edizioni acquista su lafeltrinelli a 25 56 con 45 carte arathi sabrina giannò libro ananda edizioni lafeltrinelli
il piccolo yogi libro di arathi sabrina giannò il giardino dei libri - Aug 03 2022
web bel volumetto con 45 carte per lavorare giocare con lo yoga per bambini utile per proporre giochi con un gruppo di bambini o comunque per un uso casalingo con i propri bambini ottimi i contenuti e bei disegni questo è anche un testo consigliato da insegnanti che approfondiscono lo yoga educativo
il piccolo yogi libro 45 carte interattive libro macrolibrarsi - Mar 10 2023
web usa queste 45 carte interattive con i tuoi bambini per i vostri momenti di divertimento e relax giochi di cooperazione giochi di ascolto e di apprendimento uno strumento perfetto per crescere insieme il cofanetto contiene 45 carte a colori un libretto di 144 pagine per bambini da 0 a 12 anni indice introduzione capitolo 1 gli scopi